Soluna Roller Blinds

Specifications December 2024

SANTAFÉ
SHUTTER & BLIND EXPERTS

NORMAN®
SHUTTERS. BLINDS. SHADES.

Disclaimer: Nien Made reserves all rights on updating or modification of any contents within this documentation without prior notification.

Revision Log

Edition	Amendment			Effective Date	Page	Compiler	Remark
	New	Delete	Modify				
D	V		V	2024/10/1	6,7,12, 19,27,31, 32,36,56	Susan Luo	1. Added new charging port option for MRS-32B and it is available with reversed fabric roll. 2. Added 152mm fabric valance option. 3. Changed RD fabric of Clarissa RD AB0668 to be LF fabric with collection name changed to Clarissa, and it is available for LG360 system. 4. Changed basic L shape light guard to be with end cap and update colour code.
	V			2024/11/1	47-55		Added 57 new fabric colour options.
E	V		V	2024/11/15	27~30, 56,59	Susan Luo	1. Changed the min custom return length size from 25mm to be 13mm for fabric valance. 2. Added note of chain lengths for common top treatment. 3. Added square keystone option for all fascias and valances except for crown valance and 178mm fabric valance. 4. Added connector option for split fascias.

Table of Contents

1. Features & Benefits 5
2. Fabric Information ..... 6~8
3. Lift Systems ..... 9~15
4. Size Considerations 16
5. Dual Shades & Coupled Shades & Common Valance ..... 17~18
6. LightGuard 360™ system ..... 19~23
7. Cassette System ..... 23~26
8. Fascia & Valance Options ..... 27~29
9. Fascia / Valance & Lift System Compatibility Chart 29
10. Additional Options ..... 30~33
11. Motorisation ..... 34~38
12. Mounting Depth Illustration ..... 39~46
13. Colour Coordination Chart ..... 47~56
14. Shade Size Definition / Size Deduction ..... 57~60
15. Fabric Width Illustrations ..... 61~63
16. Bracket Dimensions ..... 64~66
17. Hardware Information ..... 67~68
18. Soluna™ Roller Shades Fabric Expectations ..... 69~71
19. Soluna™ Roller Shades Product Care instructions 71

Disclaimer: Nien Made reserves all rights on updating or modification of any contents within this documentation without prior notification.

Easy Reference Guide - Norman Roller Blinds

OPERATION TYPE	MINIMUM SIZE		MAXIMUM SIZE	
	Width	Height	Width	Height
Please ensure you check the maximum width for each fabric, as not all fabrics meet the maximum blind width.				
Chain	**203mm**	**305mm**	**2997mm**	**3657mm**
Dual Shade	203mm	305mm	2438mm	2438mm
Linked	610mm	305mm	5994mm	3657mm
SmartRelease Chain	**305mm**	**305mm**	**2997mm**	**3657mm**
Dual Shade	305mm	305mm	2438mm	2438mm
Linked Not Available	N/A	N/A	N/A	N/A
Motorised - AutoWand	**559mm**	**305mm**	**2997mm**	**3657mm**
Dual Shade	559mm	305mm	2438mm	2438mm
Linked	1118mm	305mm	5994mm	3657mm
Motorised - Rechargeable	**610mm**	**305mm**	**2997mm**	**3657mm**
Dual Shade (*charging wand N/A)*	610mm	305mm	2438mm	2438mm
Linked	1220mm	305mm	5994mm	3657mm
Motorised - AC 220v Plug-In	**407mm**	**305mm**	**2997mm**	**3657mm**
Dual Shade	407mm	305mm	2438mm	2438mm
Linked	814mm	305mm	5994mm	3657mm
PrecisionLift Cordless incl Cordless Dual Shade. Linked not available for Cordless.	*For Cordless, the width and height must meet the rules below:*			
	457mm	**305mm**	**483mm**	**1219mm**
	483mm	**305mm**	**610mm**	**1829mm**
	610mm	**305mm**	**2438mm**	**3048mm**

DEDUCTIONS & TUBE SIZE

For inside mount, the order width from end cap to end cap will be the order width -3.2mm. The deductions below are in addition to this.

For deductions with a fascia or valance, please see the Fascia & Valance section of this manual

OPERATION TYPE	Opening Width	Tube Dimension	Tube Deduction	Fabric Deduction
Chain	203mm - 1524mm	29mm	-29.5mm	-30.5mm
	1524-2438mm	43mm	-29.5mm	-30.5mm
	2438-2997mm	52mm	-30.5mm	-31.5mm
SmartRelease Chain	305-2438mm	43mm	-33mm	-34mm
	2438-2997mm	52mm	-33mm	-34mm
Motorised - AutoWand	559-2438mm	43mm	-28.5mm	-29.5mm
	2438-2997mm	52mm	-28.5mm	-29.5mm
Motorised - Remote	610-2438mm	43mm	-30mm	-31mm
	2438mm - 2997mm	52mm	-30mm	-31mm
PrecisionLift Cordless	457-2438mm	43mm	-24mm	-25mm

DEFAULT FASCIA SIZE

OPERATION TYPE	Width	Length	Fascia Size
Chain & Motorised	≤ 2438mm	≤ 2438mm	89mm
		> 2438mm	114mm
	> 2438mm	≤ 1829mm	89mm
		> 1829mm	114mm
SmartRelease Chain	≤ 2438mm	≤ 2438mm	89mm
		> 2438mm	114mm
	> 2438mm	All heights	114mm
PrecisionLift Cordless	≤ 2438mm	≤ 2438mm	89mm
		> 2438mm	114mm

Note: fascia sizes will not be matched for an entire order, unless "side by side" is chosen. If you require fascias to match in a room or house, please note clearly when placing your order.

Disclaimer: Nien Made reserves all rights on updating or modification of any contents within this documentation without prior notification.

1. Features & Benefit

The latest sheers, light filtering, solar screen and room darkening fabrics; select fabrics are NFPA 701, JFRA and GREENGUARD certified.

- Sheer: Provides an atmospheric touch with significant view-through while softening the outside view. A perfect complement for Dual Shades.
- Light Filtering: Offers a wide range of light diffusion from bright to dim. Ensures privacy and may reveal shapes or outlines depending on fabric.
- Room Darkening: The fabric blocks almost 100% of incoming light, however please note that there may be significant lightbleed between the fabric and jamb; if a true block out is required, please order LightGuard 360. A perfect choice for environments where blackout and privacy control is a must.

- Safer lift systems, including our PrecisionLift™ Cordless and motorisation options – designated WCMA Best for Kids™
  - PrecisionLift™: also known as our new cordless roller shade.
    To lower, gently pull the shade by the handle to the desired location. To raise, simply push the bottom rail to the desired height. No additional pulling or tugging is required.
  - Motorised:
    -- Norman Smart motorisation: Choose battery powered or plug-in option. The Norman Smart motorisation comes with a 5-channel basic remote or SmartDial ™ G2 remote and operates multiple shades individually or simultaneously.
    -- AutoWand™ Motorisation: The AutoWand™ Motorisation comes with a control wand for each shade for operating.

- Choose from a wide array of top treatment options to cover the fabric roll, including fascias and fabric valance.

- Optional innovative Light Guard mounts to the window and helps achieve maximum light block effect even on the top and sides.

- Bottom rail options
  - Plain bottom rail: Clean, sleek and sturdy; perfectly weighted to provide seamless function.
  - Fabric-wrapped bottom rail: The matching fabric wrap provides a more uniform look throughout the shade

Disclaimer: Nien Made reserves all rights on updating or modification of any contents within this documentation without prior notification.

2. Fabric Information

Fabric Type	Price Group	Collection Name	Fabric Code	Opacity Level	Fabric Content	Fabric Width (mm)
Sheer	A	*Dazzle	AA0353	Sheer	100% Polyester	2794
	C	*Lakeshore	AA0357	Sheer	100% Polyester	2997
	B	Sheer	AB0616	Sheer	100% Polyester	2692
	B	*Sheer	AB0632	Sheer	100% Polyester	2692
	A	*Scarlett	AB0674	Sheer	95.5% Polyester, 4.5% Linen	2997
Natural	B	Phuket	A90103	LF	82% Paper, 18% Polyester	2438
	B	Bora Bora	A90104	LF	82% Paper, 18% Polyester	2438
	C	Bali	A90105	LF	74% Jute, 26% Polyester	1981
	B	Sumatra	AB0605	LF	22% Polyester, 78% Paper	2438
	D	Aruba	AB0606	LF	30.8% Polyester, 57.8% Paper, 11.4% Jute	2438
	C	Samoa	AB0607	LF	23% Polyester, 26% Paper, 51% Jute	2438
	C	Caroline	AB0608	LF	22% Polyester, 61% Paper, 17% Jute	2438
	C	Java	AB0609	LF	9% Polyester, 91% Paper	1981
	B	Riviera	AB0651	LF	16% Polyester, 84% Paper	2400
	C	Maui	AB0669	LF	16% Polyester, 58% Paper, 26% Cotton	2400
	C		AB0671	LF	47.5% Polyester, 52.5% Paper	2400
	C	Bahamas	AB0670	LF	18.5% Polyester, 35% Paper, 46.5% Cotton	2400
	A	Lake Tahoe	AB0673	LF	27.7% Polyester, 72.3% Paper	2438
	B	Catalina	AB0675	LF	14.8% Polyester, 85.2% Paper	2438
	C	Cove	AB0682	LF	68% Paper, 32% Polyester	2794
Designer	C	Valerie	AA0317	LF	100% Polyester	2692
	C	Hayes	AA0318	LF	100% Polyester	2692
	B	***Chelsea	AA0342	LF	100% Polyester	2794
	B	***Sierra	AA0343	LF	100% Polyester	2794
	C	***Amelia	AA0346	LF	100% Polyester	2997
	C	**Lola LF	AA0354	LF	100% Polyester	2997
	B	*Verona LF	AA0356	LF	100% Polyester	2997
	B	*Emery	AB0604	LF	100% Polyester	2997
	B	*Francis	AB0615	LF	100% Polyester	2794
	C	*Clarissa	AB0629	LF	100% Polyester	2997
	C		AB0630	LF	100% Polyester	2997
	E	***Clarissa	AB0668	LF	100% Polyester	2997
	C	*Breeze	AB0631	LF	85.4% Polyester, 14.6% Linen	2997
	A	*Brook	AB0638	LF	100% Polyester	2794
	C	***Kendra	AB0652	LF	100% Polyester	2997
	B	***Shimmer	AB0664	LF	100% Polyester	2794
	A	Callie	AA0362	LF	100% Polyester	2997
	B	Remy	AB0684	LF	100% Polyester	2997
RD	D	Fiji	AB0611	RD	100% Polyester	2286
	D	Bermuda	AB0612	RD	100% Polyester	2400
	D	Jamaica	AB0613	RD	100% Polyester	2400
	D	Maui	AB0614	RD	80% Polyester, 20% Linen	2794

Disclaimer: Nien Made reserves all rights on updating or modification of any contents within this documentation without prior notification.

Fabric Type	Price Group	Collection Name	Fabric Code	Opacity Level	Fabric Content	Fabric Width (mm)
RD	C	*Cambria	AB0678	RD	100% Polyester	2997
	B	**Glamour	AB0626	RD	100% Polyester	2997
	B	*Glamour	AA0358			
	E	***Garden	AB0653	RD	100% Polyester	2997
	E	*Garden	AB0653-A			
	E	***Summerland	AB0666	RD	90% Polyester, 10% Linen	2997
	E	*Summerland	AB0666-A			
	E	Bridget	AA0303	RD	100% Polyester	2794
	D	*Lola BO	AA0344-A	RD	100% Polyester	2997
	D	*Cory	AA0348	RD	100% Polyester	2997
	B	Callie RD	AA0363	RD	100% Polyester	2997
	C	Remy RD	AB0685	RD	100% Polyester	2997
	C	Francis RD	AB0687	RD	100% Polyester	2997
	C	Breeze RD	AB0688	RD	85.4% Polyester, 14.6% Linen	2997
	C	Amelia RD	AB0689	RD	100% Polyester	2997
Solar Screen (PVC Free)	C	**Serene (1%)	AB0639	1%	100% Polyester	2997
	C	**Flow (1%)	AB0442	1%	100% Polyester	2997
	B	**Windsong (1%)	AB0444	1%	100% Polyester	2997
	C	**Meadows (1%)	AB0451	1%	100% Polyester	2997
	B	**Serene (3%)	AB0439	3%	100% Polyester	2997
	C	**Lakeview (3%)	AB0449	3%	100% Polyester	2997
	C	**Meadows (3%)	AB0450	3%	100% Polyester	2997
	C	**Jubilee (3%)	AB0452	3%	100% Polyester	2997
	B	**Flow (5%)	AB0640	5%	100% Polyester	2997
	B	**Windsong (5%)	AB0446	5%	100% Polyester	2997
	C	***Moon (5%)	AB0667	5%	100% Polyester	2997
	B	**Serene (7%)	AB0441	7%	100% Polyester	2997
	B	**Flow (7%)	AB0443	7%	100% Polyester	2997
	C	**Lakeview (7%)	AB0447	7%	100% Polyester	2997
	C	**Lakeview (10%)	AB0448	10%	100% Polyester	2997
	C	Breeze Screen (1%)	AB0464	1%	85.4% Polyester, 14.6% Linen	2997
	C	Breeze Screen (3%)	AB0465	3%	85.4% Polyester, 14.6% Linen	2997
Solar Screen (PVC)	C	*A300 (1%)	AB0453	1%	30% Polyester, 70% PVC	2997
	C	*A400 (1%)	AB0457	1%	30% Polyester, 70% PVC	2997
	C	**A300 (3%)	AB0421	3%	30% Polyester, 70% PVC	2997
	C	*A300 (3%)	AB0454			
	C	**A400 (3%)	AB0425	3%	30% Polyester, 70% PVC	2997
		*A400 (3%)	AB0458			
	C	*A100 (3%)	AB0461	3%	30% Polyester, 70% PVC	2997
	C	*A820 (3%)	AB0462	3%	30% Polyester, 70% PVC	2997
	C	**A300 (5%)	AB0422	5%	30% Polyester, 70% PVC	2997
	C	*A300 (5%)	AB0455			
	C	**A400 (5%)	AB0426	5%	30% Polyester, 70% PVC	2997
	C	*A400 (5%)	AB0459			
	C	*A300 (10%)	AB0456	10%	30% Polyester, 70% PVC	2997

Disclaimer: Nien Made reserves all rights on updating or modification of any contents within this documentation without prior notification.

Fabric Type	Price Group	Collection Name	Fabric Code	Opacity Level	Fabric Content	Fabric Width (mm)
Solar Screen (PVC)	**C**	***A400 (10%)**	**AB0460**	**10%**	**30% Polyester, 70% PVC**	**2997**

* Green guard Certified.
**NFPA 701 compliant (FR) & Green guard Certified.
***NFPA 701 compliant (FR) & Japan JFRA compliant (FR) & Green guard Certified.

Note: 1. Fabric width is max fabric width available before railroading; it is not max shade width
2. Scarlett**,** Breeze, RD Maui and Summerland collections contain linen components. The natural, inherent characteristics of linen may lead to colour variation when shades are ordered at different times.
3. The RD fabrics of Fiji, Bermuda and Jamaica will have a max shade length of 2997mm.
4. The Natural fabrics of Maui AB0671 will have a max shade length of 3048mm.

Opacity and Light Control

Fabric Opacity	Description	Privacy Level
Sheer	Provides an atmospheric touch with significant view-through while softening the outside view. Objects in the room can be seen clearly through sheer shades.	Minimal
Light Filtering	Offers a wide range of light diffusion from bright to dim. Shapes or outlines may be seen through these shades but details are not visible.	Medium
Room Darkening	Blocks a significant amount of incoming light and provides maximum privacy. A perfect choice for rooms where blackout and privacy control is a must.	High

Fabric Disclaimers

Due to the nature of the weaving process, some imperfections in the weave is considered normal. Fabric appearance can vary based on the indoor light intensity. This is not a defect and is considered normal. Due to variations in fabric and dye lots, colours or sheens may vary slightly. It is recommended that all shades for the same room be ordered at the same time to help ensure colour consistency.

Natural fabrics may have variations and visual inconsistencies in colour, grain and texture. They may also fray, crack or split, twist or bow, shrink or stretch, and change colour over time due to aging, texture, direct exposure to sunlight, or other climatic conditions. These unique characteristics are inherent in natural materials and are not considered defects in material or workmanship. Repairs/ Remake will be only with like or similar parts or products supplied. Exact colour matches cannot be guaranteed.

When a roller shade is first installed and is in a completely lowered position, it is common to notice minor indentations on the fabric near the roller tube. Additionally, when the shade is left partially raised for an extended period of time, it is also common to notice slight fabric dentitions. These indentations will usually go away after the shade is in a completely lowered position for a few days. This is one of the common characteristics of roller shade fabrics.

Openness factor refers to approximately how tight the weave is. Solar screen fabrics have different textures and patterns, and the angle of the yarns can affect the passage of the light. A low openness factor means the fabric is more tightly woven and that there will be less visibility through the shade with a higher degree of light control. A high openness factor provides better view-through with a lesser degree of light control. It is within industry standard that solar screen fabrics have a minimum tolerance level of +/- 10% in openness factor. As a result, openness cannot be used to determine visibility, glare and thermal control.

Even in room darkening, for the same fabric collection, darker colour fabrics may be able to block more light than what lighter colour fabrics can.

During the shipping process, the material may shift slightly due to its woven construction, causing slight shortening or uneven edges. There may also be slight creases in fabric. To remove creases, immediately unroll the shade completely, extend, and let it hang for several days. For best result, please leave 25mm space between the bottom rail and window sill.

Disclaimer: Nien Made reserves all rights on updating or modification of any contents within this documentation without prior notification.

Telescoping Issue: Shades over 3 to 1 ratio length vs width may experience a telescoping (tracking) issue, which is not considered a defect.

Side by Side: The side by side is only available for same shade type, same lift system, same motor type, same adapter type, same top treatment, same mounting type, same fabric and same room in same order.
Note: For one line with shade qty>1, all the shades in this line will be treated as side by side.

3. Lift System

- **Continuous Cord Loop**
- **SmartRelease™**
- **PrecisionLift™ Cordless**
- **Motorised**

Continuous Cord Loop without top treatment

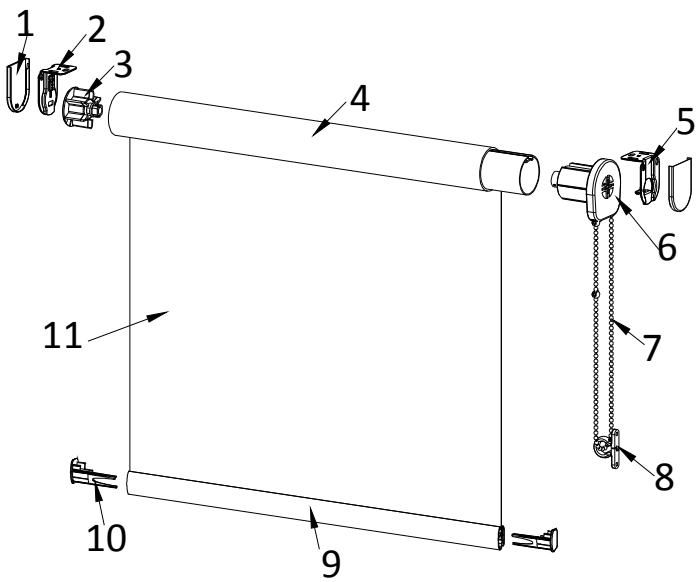

No.	Description	Remarks
1	Bracket Cover	For shade brackets Default for inside & outside mount
2	Shade Bracket	For end plug side
3	End Plug	
4	Tube	
5	Shade Bracket	For clutch side
6	Clutch	
7	Bead Chain	
8	Safety Tension Device	
9	Bottom Rail	
10	Bottom Rail End Cap	
11	Fabric	

2 Clutch sizes depending on the shade width:

- 29mm clutch: for shades 1524mm wide or less.
- 43mm clutch: generally for shades wider than 1524mm

Note: If the shades over 5 to 1 ratio length vs width, the clutch will be upgraded to 43mm with 52mm tube by default to minimize telescoping (tracking) issue.

Disclaimer: Nien Made reserves all rights on updating or modification of any contents within this documentation without prior notification.

Continuous Cord Loop with Raceway

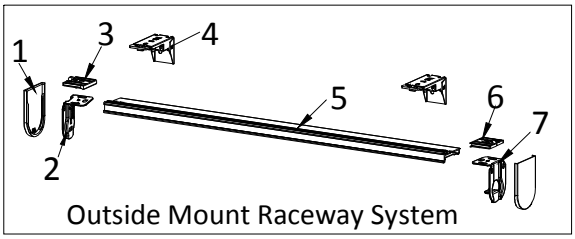

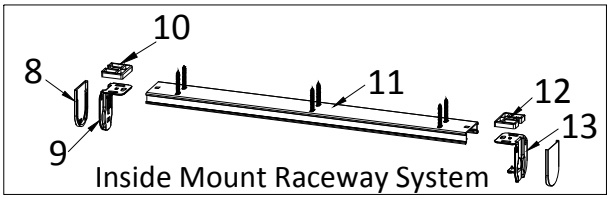

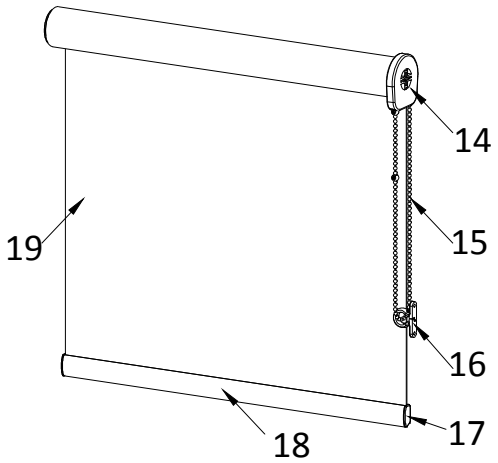

No.	Description	Remarks
1	Bracket Cover (for shade brackets)	For outside mount with raceway
2	Shade Bracket (For end Plug side)	
3	Raceway Bracket Clip	
4	Mounting Bracket	
5	Raceway	
6	Raceway Bracket Clip	
7	Shade Bracket (For clutch side)	
8	Bracket Cover (for shade brackets)	For inside mount with raceway
9	Shade Bracket (For end Plug side)	
10	Raceway Bracket Clip	
11	Raceway	
12	Raceway Bracket Clip	
13	Shade Bracket (For clutch side)	
14	Clutch	
15	Bead Chain	
16	Safety Tension Device	
17	Bottom Rail End Cap	
18	Bottom Rail	
19	Fabric	

Note:

* Raceway is only optional when there is no top treatment. When there is any type of top treatment, raceway is the default.
* Spring Assist will be default provided for the shades with lift loads between 2kg and 5.4kg. (See lift load limitations on Page 13)

Disclaimer: Nien Made reserves all rights on updating or modification of any contents within this documentation without prior notification.

Continuous Cord Loop with Fascia

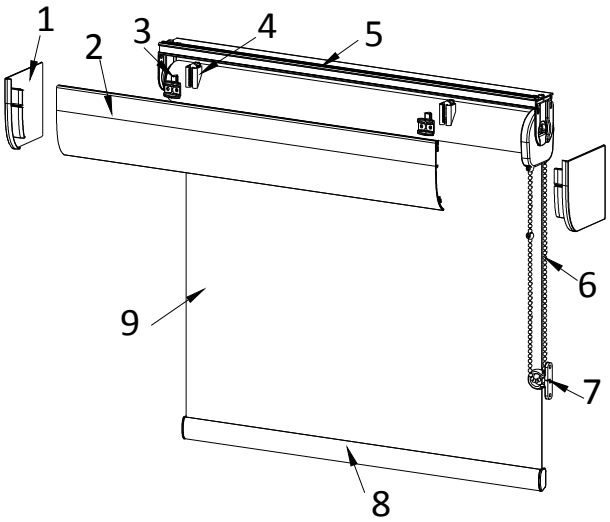

No.	Description
1	Fascia End Cap
2	Fascia
3	Valance Clip
4	Valance Bracket
5	Raceway
6	Bead Chain
7	Safety Tension Device
8	Bottom Rail
9	Fabric

Fascia options:

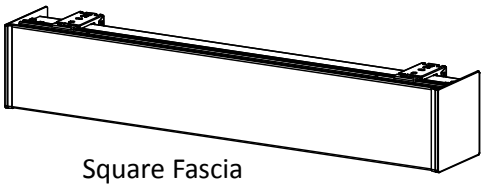

Square Fascia
(Available size: 89mm/114mm)

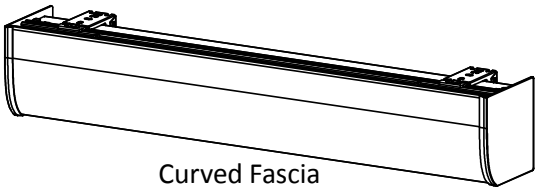

Curved Fascia
(Available size: 89mm/114mm)

Fascia Size:

System	Width X	Length Y	Default Fascia Size
Chain clutch/Motorised	X≦2438mm	Y≦2438mm	89mm
		Y＞2438mm	114mm
	X＞2438mm	Y≦1829mm	89mm
		Y＞1829mm	114mm
SmartRelease™	X≦2438mm	Y≦2438mm	89mm
		Y＞2438mm	114mm
	X＞2438mm	All heights	114mm
PrecisionLift™ Cordless	X≦2438mm	Y≦2438mm	89mm
		Y＞2438mm	114mm

Note:
We will not automatically match fascia sizes for entire order unless “Side by Side” is chosen or specified in special instructions. Customers must choose the “Side by Side” option while placing the order to avoid any matching issues.

This table is for reference only. There may be exceptions due to matching purposes or size ratio. E.g.: Normally, 89mm fascia is for shades with width≦1524mm with 29mm clutch. But when the size ratio exceeds 1:5, the clutch size will be upgraded. In this situation, the fascia size will be upgraded as well.

Disclaimer: Nien Made reserves all rights on updating or modification of any contents within this documentation without prior notification.

Continuous Cord Loop with Valance

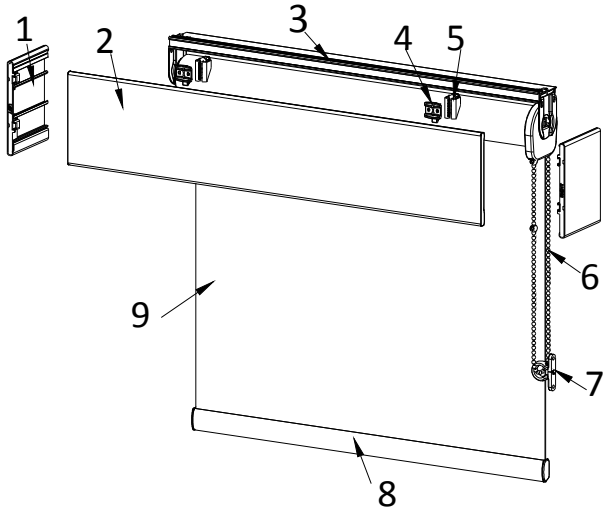

No	Description
1	Valance Return
2	Valance
3	Raceway
4	Valance Clip
5	Valance Bracket
6	Bead Chain
7	Safety Tension Device
8	Bottom Rail
9	Fabric

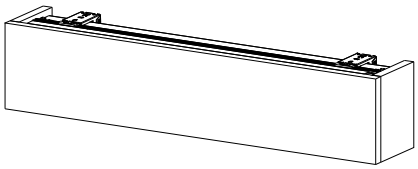

Fabric Valance
(Available size: 89mm/114mm/152mm/178mm)

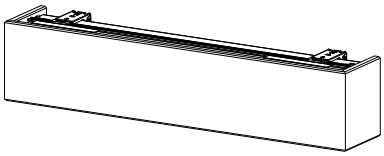

114mm Wood Modern Valance

Fabric Valance Sizes:

System	Width X	Length Y	Fabric Valance Size Options
Chain clutch/Motorised	X≦2438mm	Y≦2438mm	89mm/114mm/152mm/178mm
		Y＞2438mm	114mm/152mm/178mm
	X＞2438mm	Y≦1829mm	89mm/114mm/152mm/178mm
		Y＞1829mm	114mm/152mm/178mm
SmartRelease™	X≦2438mm	Y≦2438mm	89mm/114mm/152mm/178mm
		Y＞2438mm	114mm/152mm/178mm
	X＞2438mm	All heights	114mm/152mm/178mm
PrecisionLift™ Cordless	X≦2438mm	Y≦2438mm	89mm/114mm/152mm/178mm
		Y＞2438mm	114mm/152mm/178mm

Note: 1. This table is for reference only. There may be exceptions due to size ratio. If the Cordloop shade sizes over 1:5 ratio width vs length, the clutch size will be upgraded. In this situation, the valance size needs to be upgraded as well and it is not available to order 89mm fabric valance.

2. We will not automatically match valance sizes for entire order unless “Side by Side” is chosen or specified in special instructions. Customers must choose the “Side by Side” option while placing the order to avoid any matching issues.

Disclaimer: Nien Made reserves all rights on updating or modification of any contents within this documentation without prior notification.

SmartRelease™

This exclusive and patent-pending innovation to cord loop systems allows the shade to be released or lowered from an upward position with a gentle pull.

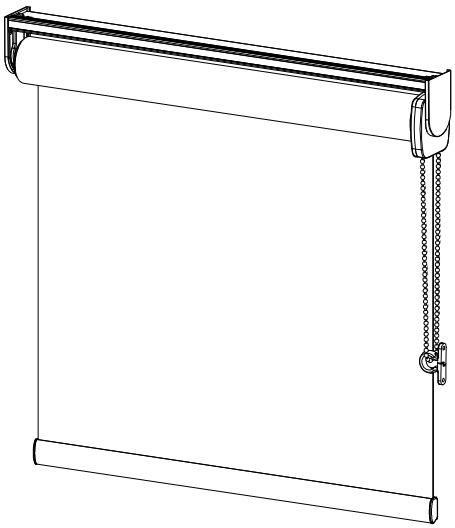

Raceway is the default for SmartRelease™ whether or not there is a top treatment, without additional surcharge.

For Smart Release™, the available clutch size is 43mm (max width: 2438mm) and 52mm (max width: 2997mm).

. **Spring Assist**

- . Must meet min width of 762mm (due to the length of spring assist)
- . Must exceed lift load of 4.4 lbs*
- . Spring assist maximum lift load is 12 lbs

* Please note the Spring Assist is primarily designed to operate with heavier lift loads. And it is default provided for the shades with lift loads between 4.4 lbs and 12 lbs.

PrecisionLift™ Cordless

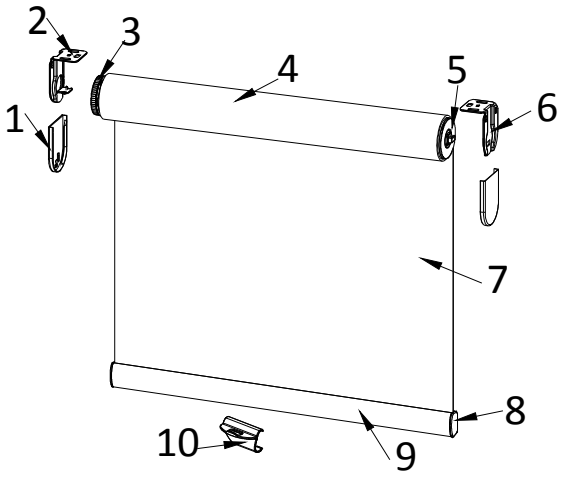

No.	Description	Remark
1	Bracket Cover	For shade brackets Default for inside mount & outside mount
2	Shade Bracket	For Tension Dial side
3	Tension Dial	
4	Tube	
5	End Plug	
6	Shade Bracket	For End Plug side
7	Fabric	
8	Bottom Rail End Cap	
9	Bottom Rail	
10	Handle	

Featuring exclusive one-touch lift technology for quick, accurate, and nimble control. To lower, gently pull the shade by lifting the handle to the desired position. To raise, just push the Bottom Rail to the desired height. No additional pulling or tugging is required.
If the shade does not stay at the desired location, it can be fine-tuned with the tension adjustment dial.

Note:
-Raceway is optional for PrecisionLift™ Cordless when ordered without top treatment. Raceway is default when ordered with a top treatment.
-PrecisionLift™ Cordless is not available for Coupled Shades.
-One black fiberglass pole will be supplied per cordless shade order automatically. One extra pole per shade can be purchased with a nominal fee and length can be selected 762mm or 1470mm.

Disclaimer: Nien Made reserves all rights on updating or modification of any contents within this documentation without prior notification.

Max order length≦2438mm, we will provide one 762mm fiberglass pole.
Max order length＞2438mm, we will provide one 1470mm combination fiberglass pole.

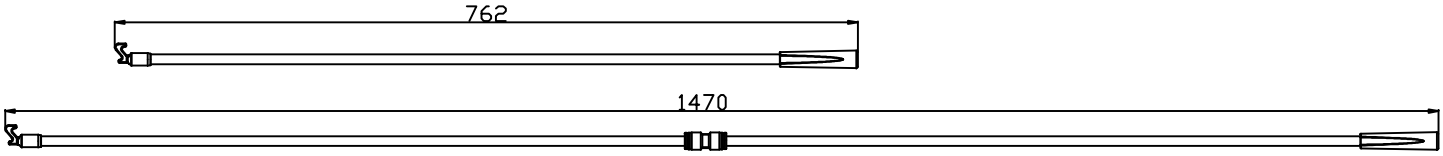

Important Disclaimers:
Aligned bottom bars level: For side by side PrecisionLift™ Cordless shades, the amount of bottom bar exposed when the shade is raised all the way to the top may vary, depending on speed when lifting the shade and other factors. Therefore, we can't guarantee the bottom bars are lined up perfectly when shades are raised to the top.
Telescoping: To prevent telescoping, the shade handle must be placed in the center of bottom rail and pull or raise it vertically when operating. If telescoping occurs, please adjust the shade by pulling and raising it vertically again until shade can operate smoothly.

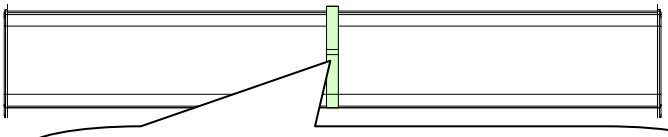

This label indicated the center will be attached on the back of bottom rail and help customers to attach Handle to the midmost location of bottom rail.

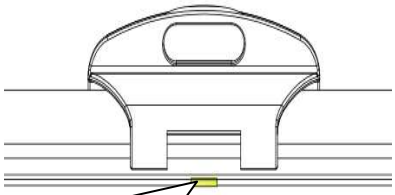

The center of the Handle should be aligned with the label.

Motorised

AutoWand™ motorisation

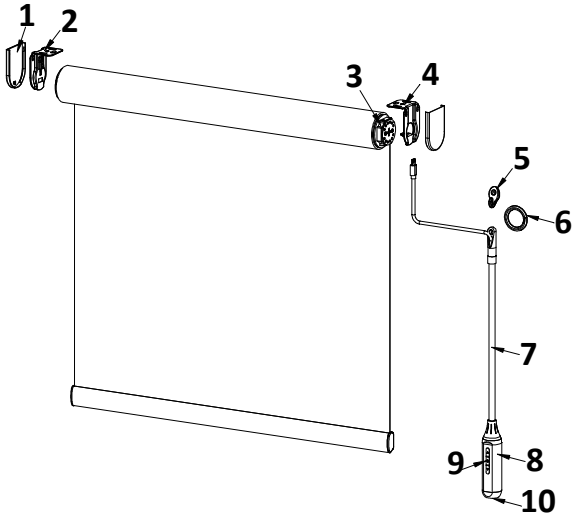

No	Description
1	Bracket Cover
2	Shade Bracket
3	Motor
4	Shade Bracket
5	Hook
6	Ring
7	Control Wand
8	Handle
9	Control Buttons
10	Micro USB Charging Port

The AutoWand™ motorisation comes with electrically rechargeable lithium ion batteries.
• The motorisation comes with a control wand for each shade.
• The USB charging cable will be supplied as 1 pc per order for charging the motor.

Disclaimer: Nien Made reserves all rights on updating or modification of any contents within this documentation without prior notification.

Norman Smart motorisation

AC Adapter Plug-In (MRS-32A)

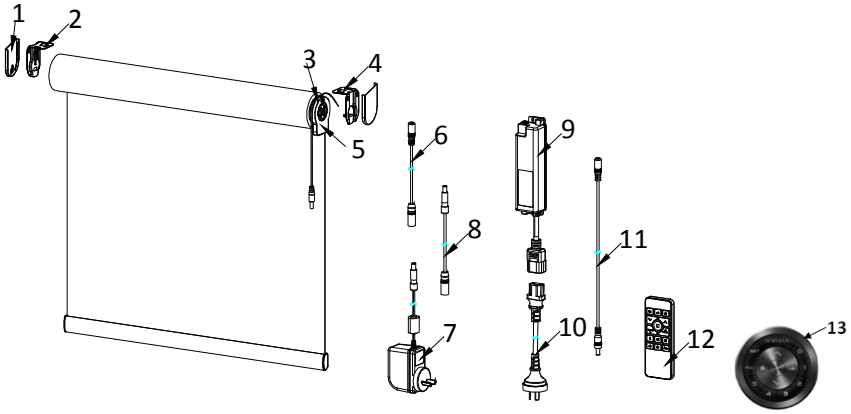

No	Description
1	Bracket Cover
2	Shade Bracket
3	Motor
4	Shade Bracket
5	Button Box
6	36W Adapter Connector Cord
7	36W Adapter
8	36W Adapter Extension Cord
9	65W Adapter
10	65W Adapter AC Power Cord
11	65W Adapter Extension Cord
12	Basic Remote RC-A01
13	SmartDial™ G2 Remote

Rechargeable Battery with Charging Wands (MRS-32B)

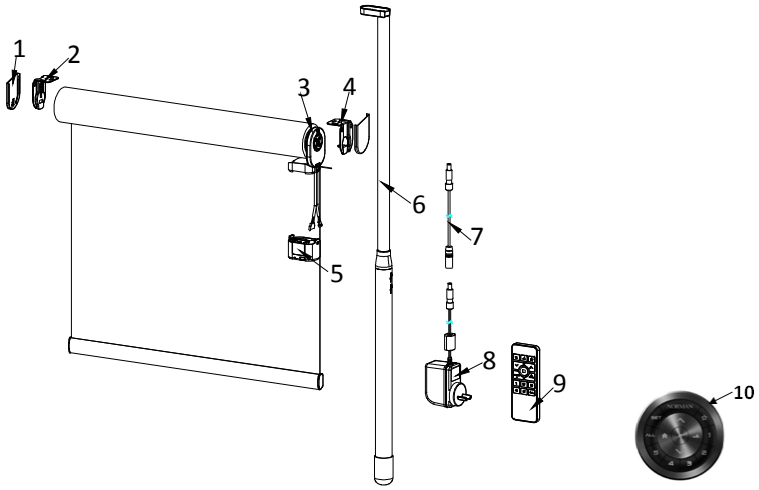

No	Description
1	Bracket Cover
2	Shade Bracket
3	Motor
4	Shade Bracket
5	Charging Port for Power Charger
6	Charging Wand (Power Charger)
7	36W Adapter Extension Cord
8	36W Adapter
9	Basic Remote RC-A01
10	SmartDial™ G2 Remote

Rechargeable Battery with AC Adapter (MRS-32C)

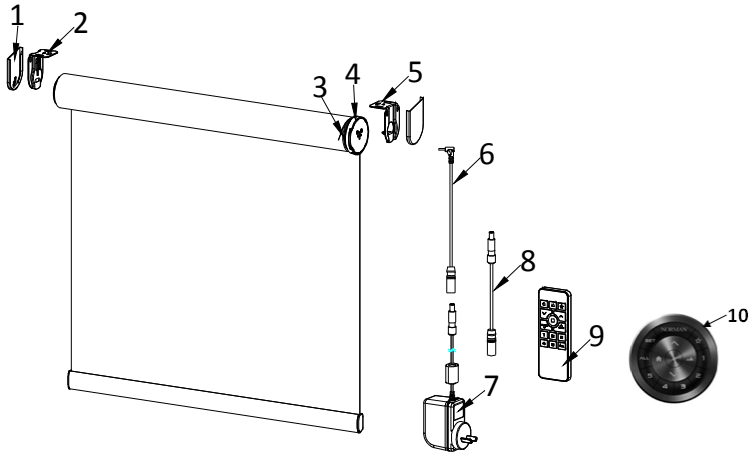

No	Description
1	Bracket Cover
2	Shade Bracket
3	Motor
4	Wire Connector Box
5	Shade Bracket
6	32C Adapter's Connector Cord
7	36W Adapter
8	36W Adapter Extension Cord
9	Basic Remote RC-A01
10	SmartDial™ G2 Remote

The motorisation can choose between battery powered and AC adapter plug-in for motorisation options.

- The motorisation comes with a 5-channel basic remote or SmartDial™ G2 remote for motorisation options.
- Each shade must be assigned to a channel.
- Side by sides will be match with the Adapter type.

Disclaimer: Nien Made reserves all rights on updating or modification of any contents within this documentation without prior notification.

4. Size Considerations

	Single		Dual Shade		Coupled Shade	
	Clutch	Cordless	Clutch	Cordless	Clutch	Cordless
Min Width	203mm (305mm for Smart-Release™)	457mm	203mm (305mm for Smart-Release™)	457mm	610mm (Not available for SmartRelease™)	NA
Max Width	2997mm	2438mm	2438mm	2438mm	5994mm	NA
Min Length	305mm	305mm	305mm	305mm	305mm	NA
Max Length*	3657mm	3048mm	2438mm	2438mm	3657mm	NA

-This table is for reference only. There may be exceptions due to different material, width and weight of the fabrics. For details by fabric, refer to the fabric information on page 6~7.

*For RD fabrics of Fiji, Bermuda and Jamaica, the max shade length for the single and coupled shades of the Continuous Cordloop, SmartRelease™, Cordless and motorised shades will be 2997mm.

*For Natural fabrics of Maui AB0671, the max shade length for the single and coupled shades of the Continuous Cordloop, SmartRelease™ and motorised shades will be 3048mm.

-PrecisionLift™ Cordless has a special width and height size limitation. Refer to charts below.

Width X	Height Y
457mm≦X≦483mm	Y≦1219mm
483mm＜X≦610mm	Y≦1829mm
610mm＜X≦2438mm	Y≦3048mm

Size limitation for Norman Smart and AutoWand™ motorisation:

	Single				Dual Shade			Coupled Shade			
	Motorised				Motorised			Motorised			
	AC Adapter Plug-In (MRS-32A)	Rechargeable Battery with Charging Wands (MRS-32B)	Rechargeable Battery with AC Adapter Charger (MRS-32C)	AM25	AC Adapter Plug-In (MRS-32A)	Rechargeable Battery with AC Adapter Charger (MRS-32C)	AM25	AC Adapter Plug-In (MRS-32A)	Rechargeable Battery with Charging Wands (MRS-32B)	Rechargeable Battery with AC Adapter Charger (MRS-32C)	AM25
Min Width	407mm	610mm	610mm	559mm	407mm	610mm	559mm	814mm	1220mm	1220mm	1118mm
Max Width	2997mm	2997mm	2997mm	2997mm	2438mm	2438mm	2438mm	5994mm	5994mm	5994mm	5994mm
Min Length	305mm	305mm	305mm	305mm	305mm	305mm	305mm	305mm	305mm	305mm	305mm
Max Length	3657mm	3657mm	3657mm	3657mm	2438mm	2438mm	2438mm	3657mm	3657mm	3657mm	3657mm

Note: Due to the limited lift load of motors, not all fabrics can be made to the maximum size. For the max size of each fabric, please refer to attached file: Appendix - Roller Motorisation Size Limitations.

Disclaimer: Nien Made reserves all rights on updating or modification of any contents within this documentation without prior notification.

5. Dual Shades & Coupled Shades & Common Valance

Dual Shades

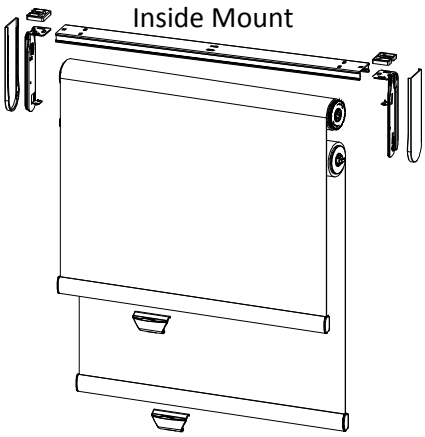

- Like two shades in one, Dual Shade features one shade behind another allowing for ultimate light and privacy control.
- ˙Two shades are controlled independently.
- Front shade will be reverse roll, while the rear shade will be standard roll.
- Control locations:
  For cordless, it is only available to be front shade on right / back shade on left.
  For other lift systems:
  Option 1: Front shade on right / back shade on left
  Option 2: Front shade on left / back shade on right.
- Available with No top treatment or 178mm Fabric Valance
- Raceway will be provided by default, regardless of whether or not there is a top treatment.
- Dual shades can have different lift systems for the front shade and the back shade
- Available Lift Systems: Continuous Cord Loop, SmartRelease™, PrecisionLift™ Cordless, & Motorised

***Note:**
1) The minimum (both width & height) is based on the larger of the two minimums.
2) 43mm tube will always be used for dual shades with mixed lift systems.

Coupled Shades

Great for side by side windows with small gaps.
Choose from a standard, one-control system or independently operated shades.

- Standard: Allows two shades to be operated together by one control. Available Lift Systems: Continuous Cord Loop & Motorised
  Control Location: L/R
- Independently Operated: Allows each shade to be operated separately. Available Lift Systems: Continuous Cord Loop & Motorised
  Control Location: Left Shade: L, Right Shade: R
- All single top treatment options are available for Coupled Shades.
- Exclusions: PrecisionLift™ Cordless and SmartRelease™ are not available with any Coupled Shades.

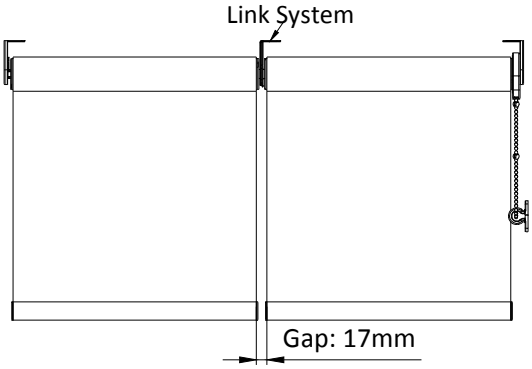

Coupled Shades

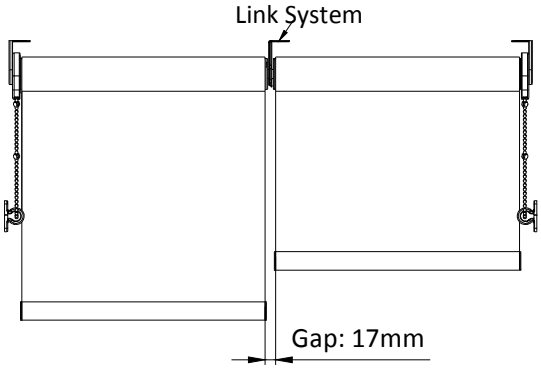

Coupled Shades (Independently Operated)

Disclaimer: Nien Made reserves all rights on updating or modification of any contents within this documentation without prior notification.

Common Valance

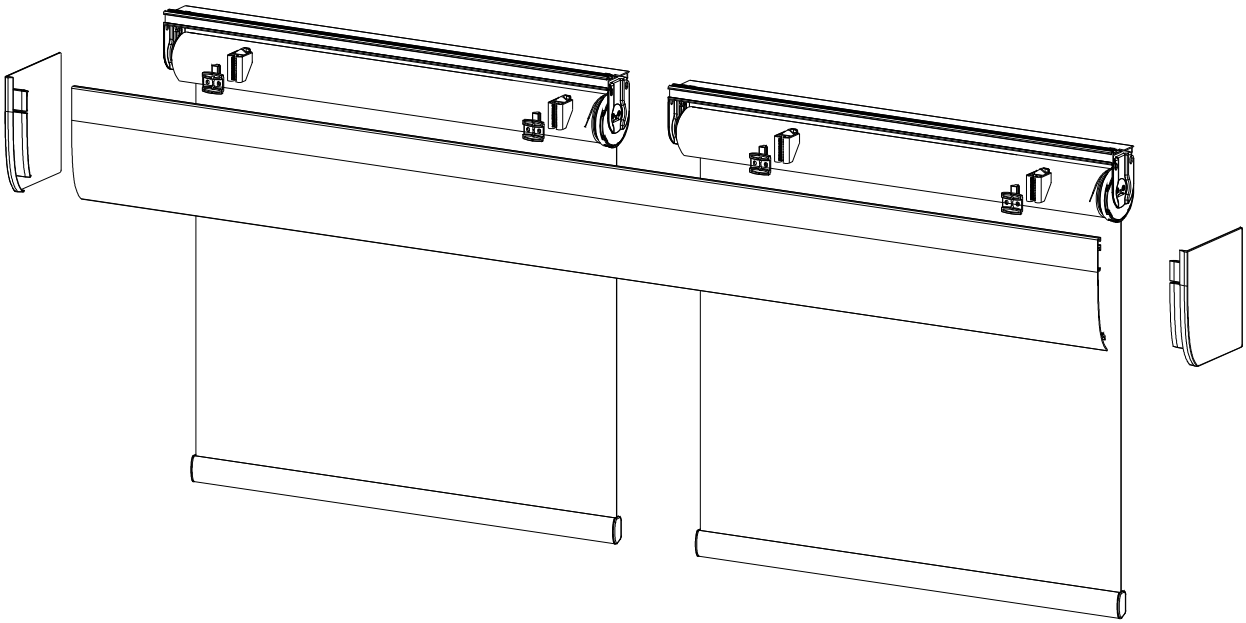

- Common valance is available in all top treatments.
- One Common Valance can share by up to 4 shades.
- Each shade lifts and operates independently.
- The gap size between top installed brackets of two shades default to be 0mm, maximum gap size up to 305mm.

Disclaimer: Nien Made reserves all rights on updating or modification of any contents within this documentation without prior notification.

6. LightGuard 360™ system

- **Lift Systems**: Continuous CordLoop, Motorised, Cordless
- **Mounting Type**: Inside mount, Semi-Inside mount, Outside Mount
- **Shade Type**: Single shade only
- **Tube Size**: 43mm & 52mm
- **Fabrics**: All fabrics
- **Fabric Roll**: Standard roll only.
- **Bottom Rail**: Plain only
- **Housing & Housing Cover Size**: 89mm & 114mm
- **Housing Cover:** Plain or Fabric Wrapped (Fabric colour: Defaults to the shade fabric; optional to select a different fabric that provided for LG360.)
- **Control location**: Left or Right.
- **Power cord/Charging cable position for motorised:**
  - MRS-32A and MRS-32C motors: For Inside mount and Semi-Inside mount, the position of power cord/charging cable is default at backside. Frontside is optional. For Outside mount, it is default at frontside.
  - MRS-32B and AM25 motors: The position of power cord is default at front side for all mounting types.
- For Cordless, it is default supplied without any pole. The pole with attachment can be selected (See pole detail on Page 23).

LG360 Inside Mount

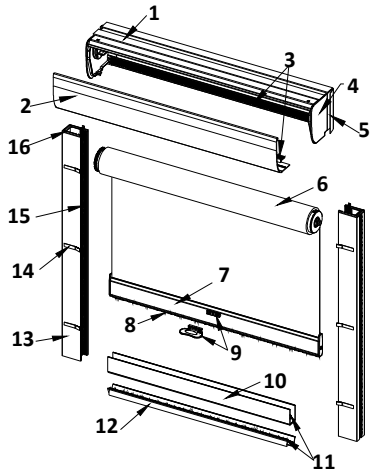

No.	Description
1	Housing
2	Housing cover
3	Wool pile strip
4	Housing end caps
5	Light block film
6	Fabric tube
7	LightGuard 360 bottom rail
8	Wool pile strip
9	Handle with base
10	Bottom channel “U”
11	Bottom channel wool pile
12	Bottom channel: low-profile “M”
13	Side channels
14	Screw location labels
15	Side channel wool pile
16	Side channel top caps

LG360 Outside Mount

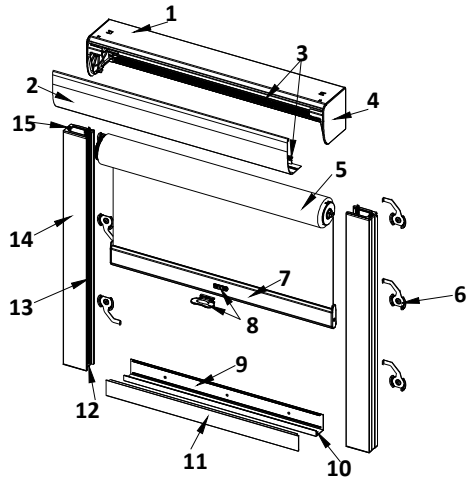

No.	Description
1	Housing
2	Housing cover
3	Wool pile strip
4	Housing end caps
5	Fabric tube
6	Swivel brackets
7	LightGuard 360 bottom rail
8	Handle with base
9	Bottom channel
10	Bottom channel wool pile
11	Bottom channel cover
12	Side channel bottom caps
13	Side channel wool pile
14	Side channel
15	Side channel top caps

Disclaimer: Nien Made reserves all rights on updating or modification of any contents within this documentation without prior notification.

Components	Remark
Housing	Available in 4 colours: 3058 White, 3094 Cottage White, 3129 Silver, 3208 Black
Housing cover	
Housing end caps	Available in 4 colours: 2058 White, 2094 Cottage White, 2129 Silver, 2208 Black
Wool pile strip	Supplied for housing, housing cover, side channels, bottom channels, LightGuard 360 bottom rail
Fabric tube	43mm Tube for shade width≦2438mm; 52mm Tube for shade width>2438mm.
LightGuard 360 bottom rail	Available in 4 colours: 3058 White, 3094 Cottage White, 3129 Silver, 3208 Black
Handle with base	For LightGuard 360™ Cordless only.
Side channels	Available in 4 colours: 3058 White, 3094 Cottage White, 3129 Silver, 3208 Black
Side channel top & bottom caps	Available in 4 colorus: 2058 White, 2094 Cottage White, 2129 Silver, 2208 Black
Bottom channel “U”	Optional for Inside Mount. Available in 4 colours: 3058 White, 3094 Cottage White, 3129 Silver, 3208 Black
Bottom channel: low-profile “M”	Optional for Inside Mount. Available in 4 colours: 3058 White, 3094 Cottage White, 3129 Silver, 3208 Black
Bottom channel with Cover	Default supplied for Outside Mount. *Optional: No Bottom Channel or IM U Bottom Channel. Available in 4 colours: 3058 White, 3094 Cottage White, 3129 Silver, 3208 Black

Note: 1. For Continuous Cordloop shades, the colour of plastic bead chain will be default to match with housing colour, and optional override is available.
2. For all lift systems, the colour of brackets, clutch, end plug, MRS-32A button box and MRS-32C wire connector box is default to black, and override is not available.
3. The LightGuard 360 bottom rail colour will be default to match with housing colour, and override is not available.
4. For inside mount, the housing, side channels and bottom channels will be predrilled mounting holes with fixing screw supplied.
5. For outside mount, the housing and bottom channels will be predrilled mounting holes with fixing screw supplied.
6. For Continuous Cordloop shades, the bead chain will be made in continued chain without bead chain connector.
7. For LightGuard 360™ Cordless, the handle is different from regular cordless shade, which is handle with base.
8. For LightGuard 360 bottom rail, it will be default supplied without wood pile if there is bottom channel ordered.
9. *For OM LightGuard 360, if there is an existing sill at bottom, then the options of “No Bottom Channel” and “IM U Bottom Channel” will be available.
10. For MRS-32B charging port colour, it is default to match with housing colour.
11. For OM LightGuard 360, the side channels will be default with supplied with wool pile strip at backside.

Shade Size Limitation:

Lift System	Single Shade			
	Min Width	Max Width	Min Length	Max Length
Continuous Cordloop	305mm	2997mm	305mm	3657mm
Motorised	407mm	2997mm	305mm	3657mm
Cordless	457mm≦X≦483mm	2438mm	305mm	Y≦1219mm
	483mm＜X≦610mm			Y≦1829mm
	610mm＜X≦2438mm			Y≦3048mm

Note: This table is for reference only. There may be exceptions due to different material, width and weight of the fabrics.

Disclaimer: Nien Made reserves all rights on updating or modification of any contents within this documentation without prior notification.

Housing & Housing Cover size:

Mounting Type	Lift System	Width X	Length Y	Housing & Housing Cover
Inside Mount / Semi-Inside Mount/ Outside Mount	Continuous Cordloop / Motorised	X≦2438mm	Y≦2438mm	89mm
			Y>2438mm	114mm
		X>2438mm	Y≦1829mm	89mm
			Y>1829mm	114mm
	Cordless	X≦2438mm	Y≦2438mm	89mm
			Y>2438mm	114mm

Note: 1. This table is for reference only. There may be exceptions due to matching purposes.
2. We will not automatically match Housing & Housing Cover sizes for entire order unless “Side by Side” is chosen or specified in special instructions. Customers must choose the “Side by Side” option while placing the order to avoid any matching issues.

Housing & Housing Cover	Size	Colour
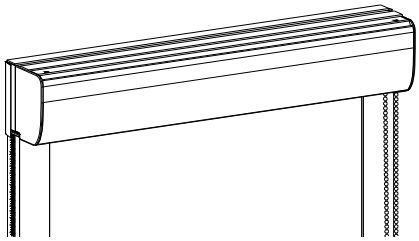	89mm, 114mm	3058 White, 3094 Cottage White, 3129 Silver, 3208 Black

Minimum Mounting Depth

89mm Housing & Housing Cover		114mm Housing & Housing Cover	
Full Inside Mount	Semi-Inside Mount	Full Inside Mount	Semi-Inside Mount
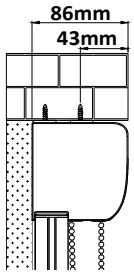	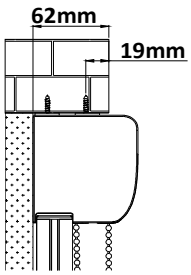	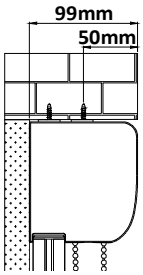	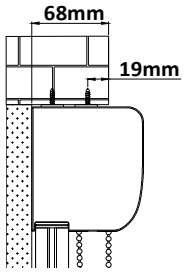

Disclaimer: Nien Made reserves all rights on updating or modification of any contents within this documentation without prior notification.

Components Dimensions

Component	Drawing		
89mm Housing	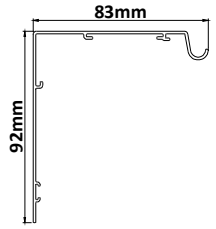 Housing	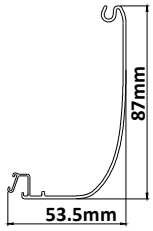 Housing Cover	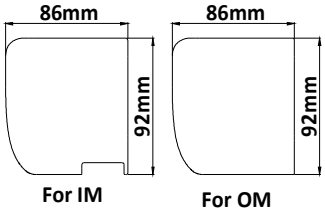 Housing end cap
114mm Housing	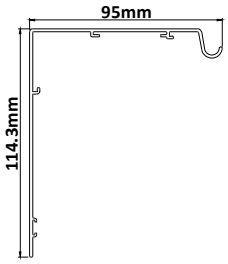 Housing	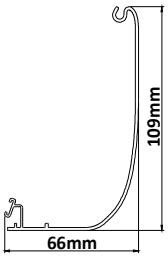 Housing Cover	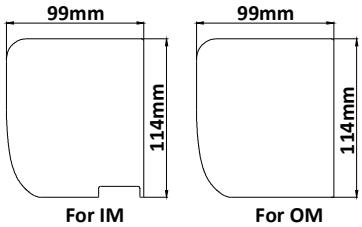 Housing end cap
Side Channel for both IM & OM	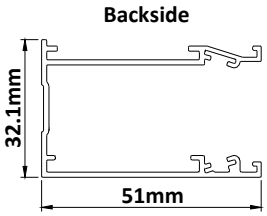		
Bottom Channel for IM	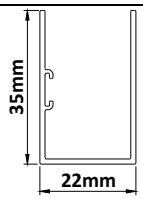 U shape	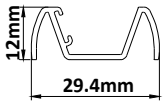 M shape	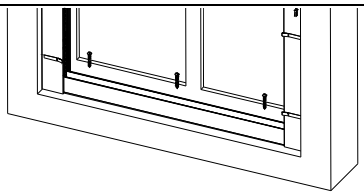
Bottom Channel with cover for OM	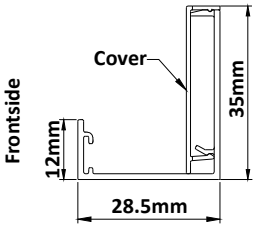	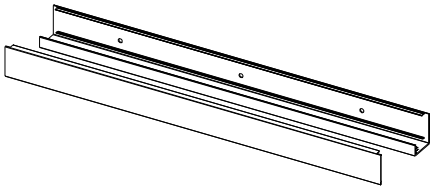	
Swivel Bracket for OM side channels	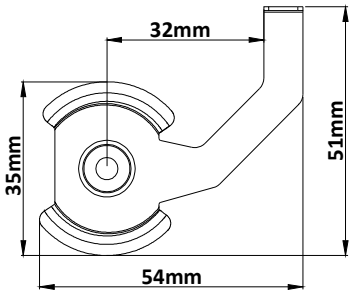		

Disclaimer: Nien Made reserves all rights on updating or modification of any contents within this documentation without prior notification.

Pole for LightGuard 360™ Cordless Shades (optional)

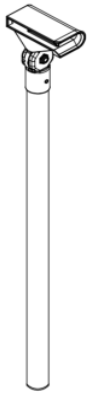

Pole with attachment

- Colour: Black
- Optional Lengths: 915mm, 1524mm

Note: Max of 2 poles or pole attachments per shade.

Disclaimer: Nien Made reserves all rights on updating or modification of any contents within this documentation without prior notification.

8. Fascia & Valance Options

Options	Colour	Height	Remark
 Curve Fascia	**Plain:** **Standard colours**: White, Cottage White, Black **Optional Colour**: Anodised Silver **With fabric:** Fabric: Defaults to the shade fabric; optional to select a different fabric.	89mm/ 114mm	•For fascia with fabric, max width is subject to fabric max width. When fascia width exceeds max fabric width, the fascia will be center spliced with keystone supplied. •Anodised Silver fascia will be default with white end cap. •Anodised Silver fascia is not available for fabric insert.
 Square Fascia	**Standard colour**: White, Cottage White, Black **Optional colour**: Anodised Silver	89mm/ 114mm	•Anodised Silver fascia will be default with white end cap.
 Fabric Valance	**Default**: Same as shade fabric. **Optional**: Available in all fabrics. For Dual shades, the fabric of the valance will be default same as front shade fabric. Optional to select a different fabric.	89mm/ 114mm/ 152mm/ 178mm	•Max width is subject to fabric max width. When valance width exceeds (max fabric width – 176mm), the valance will be center spliced with connector or keystone supplied. •Valance returns available for semi inside mount & outside mount. • For outside mount, return size: default: standard (based on shade size&fabric) custom: longer than standard 3mm~25mm • For semi inside mount, return size: default: 25mm custom: 13mm~114mm
 Wood Modern Valance	•**Paint**: Pure White, Silk White, Pearl, Crisp Linen, Stone Gray, Clay •**Stain:** Limed White, Dark Teak, Weathered Teak, Wenge, Black Walnut, Matte Black	114mm	•Valance returns available for semi inside mount & outside mount. •For full outside mount, return size will be provided by default based on shade length & fabric. •For semi inside mount, return size: default: 25mm; custom: 13mm~114mm

- Top treatments are not recommended for door applications.
- Valance with return: valance inner width wider than 2381mm, it will be center spliced.
- Valance without return: valance width wider than 2413mm, it will be center spliced.
- For common fascia and coupled shade with fascia, fascia width wider than 2413mm (including end cap), it will be center spliced.
- Keystones can be specified as an option (up to 3 keystones per valance/fascia).
- When keystones are ordered, valances/fascias are split by default.
- When the custom width of the valances / fascias is longer than standard and exceeds the maximum size that needs to be split, it is default that the longer sizes will be equally divided into left & right side regardless there is no return or one side return or two side returns/end caps.

Disclaimer: Nien Made reserves all rights on updating or modification of any contents within this documentation without prior notification.

Keystones: available in V-shape and Square shape

Keystone for Wood Modern Valance:

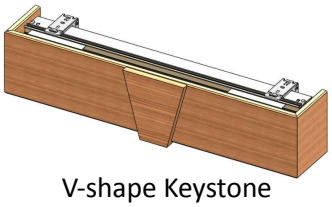

V-shape Keystone

Square shape Keystone

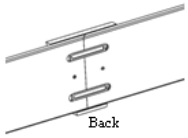

Keystone for Fabric Valance: Square shape keystone is not available for 178mm fabric valance.

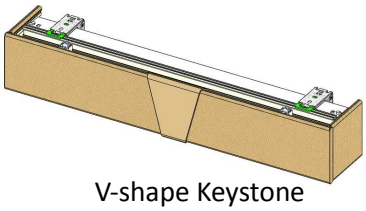

V-shape Keystone

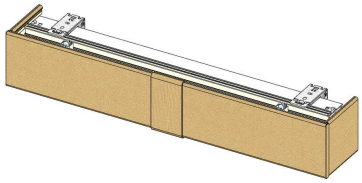

Square shape Keystone

Keystone for Curved Fascia:

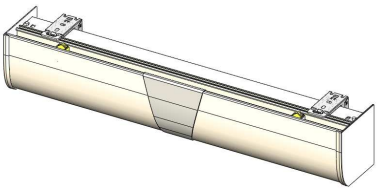

V-shape Keystone

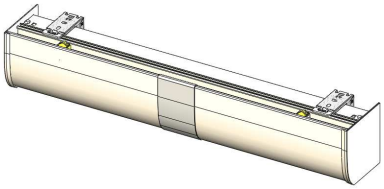

Square shape Keystone

Keystone for Square Fascia:

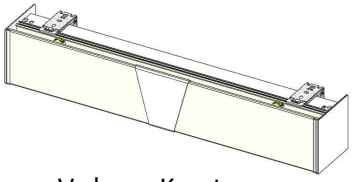

V-shape Keystone

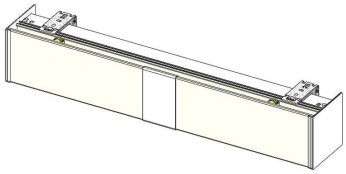

Square shape Keystone

Valance Connector

Valance connector for
Wood Modern Valance

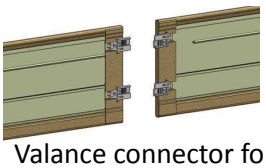

Valance connector for
Fabric Valance

Fascia Connector

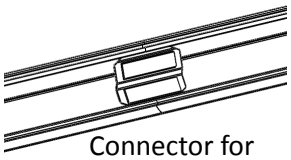

Connector for
Curved Fascia

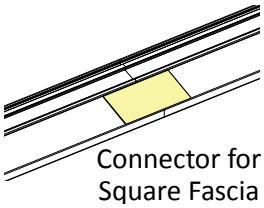

Connector for
Square Fascia

Note: When valance/fascia is exceeding the limited size and need to be spliced, the valance connector is default supplied for wood /fabric valances and keystone is default supplied for fascias.

Disclaimer: Nien Made reserves all rights on updating or modification of any contents within this documentation without prior notification.

Keystone Dimensions

Top Treatment	V-shape Keystone	Square Shape Keystone
Wood Modern Valance	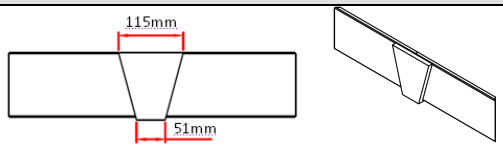	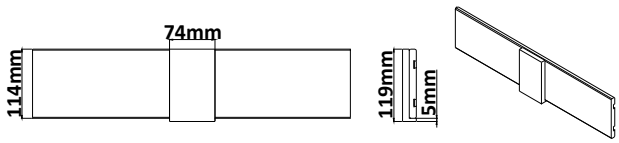
Fabric Valance *	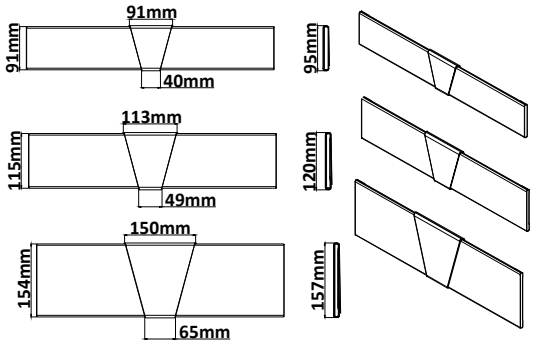	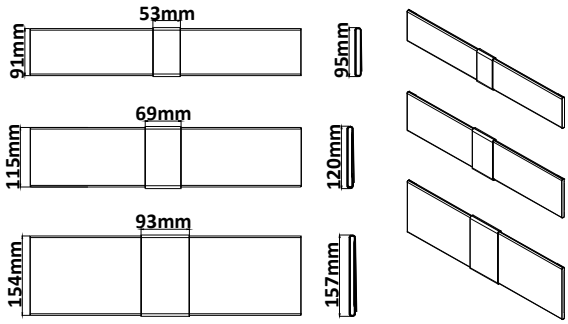
Curved Fascia	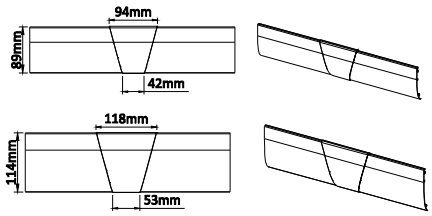	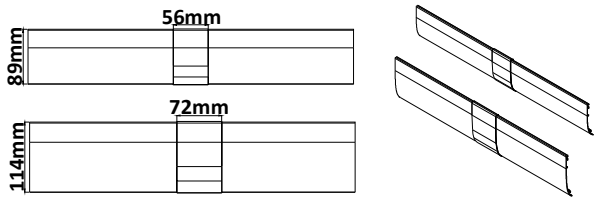
Square Fascia	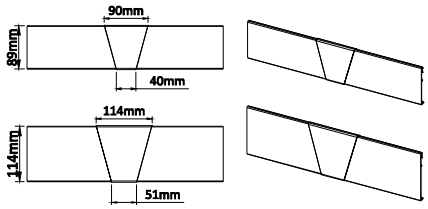	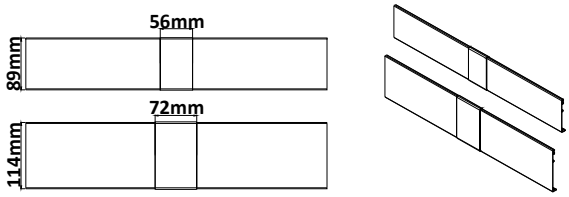

*Please note that the dimensions for fabric valance keystone may vary on the fabric thickness.

9. Fascia / Valance & Lift System Compatibility Chart

	Single			Dual Shade			Coupled Shade		
	Clutch	Cordless	Motorised	Clutch	Cordless	Motorised	Clutch **(not available for Smart-Release™)**	Cordless	Motorised
No Fascia/ Valance	√	√	√	√	√	√	√	NA	√
Curved Fascia	√	√	√	NA	NA	NA	√	NA	√
Square Fascia	√	√	√	NA	NA	NA	√	NA	√
Fabric Valance	√	√	√	√ **178mm only**	√ **178mm only**	√ **178mm only**	√	NA	√
Wood Modern Valance	√	√	√	NA	NA	NA	√	NA	√

Disclaimer: Nien Made reserves all rights on updating or modification of any contents within this documentation without prior notification.

10. Additional Options

Bead Chain for Continuous Cord Loop & SmartRelease™ Shades:
Bead Chain Options:

- **Standard**: Plastic - Available in White (2058), Cottage White (2094), Black (2208), Nature (2579), Sahara (2578), Terra (2334), Silver (2129), Chocolate (2463)
- **Upgrade:** Stainless Steel (with surcharge)

Bead Chain Length:

	Order Length (Y)	Bead Chain Length (For Continuous Cord Loop)	Bead Chain Length (For SmartRelease™)
Default	305mm≦Y≦762mm	2/3Y+152mm	406mm
	762mm<Y≦1067mm		612mm
	1067mm<Y≦1372mm		917mm
	1372mm<Y≦1676mm		1222mm
	1676mm<Y≦2286mm		1526mm
	2286mm＜Y≦3657mm		2136mm
Optional	All shade heights	Plastic/Stainless Steel: Minimum custom length must be longer than the default (2/3Y+152mm); Maximum custom length is 3x the order height. **	Plastic/Stainless Steel: Minimum custom length is 305mm; Maximum custom length is 3x the order height. **

- Bead chain length is measured from the top bracket/installation bracket (raceway) to the bottom of the tension device.
- The tolerance for bead chain length of SmartRelease™ would be 0~30mm.
- For Continuous Cordloop shades, the bead chain will be made in continued chain without bead chain connector.
- **If a bead chain length over 3 times the shade height is required, please specify in Special Instructions.
- When the custom bead chain length exceeds 2136mm for SmartRelease, there will be a surcharge.
- For common valance shades, the bead chain length will be default supplied as per shade height of each shade when standard chain length is ordered, and the chain length will be default supplied as per custom chain length size for all shades when custom chain length is ordered.

Bottom Rail

Plain Bottom Rail

- Default
- Standard colours: white, cottage white and black
- Optional colour: Anodised Silver (not available for fabric-wrapped, default with White end cap)

Fabric-wrapped Bottom Rail (optional)

(Note: fabric-wrapped on front side only regardless of the system)

Disclaimer: Nien Made reserves all rights on updating or modification of any contents within this documentation without prior notification.

Fabric Roll

- Standard roll: Fabric rolls down against the window glass.
- Reverse roll: Fabric rolls down away from the window glass.
  - Reverse roll is default for the front shade of the dual shades.
  - Not available with curved fascia and square fascia.
  - Not available for MRS-32B motorised shade with socket at front.
  - Not available for cassette system.

Standard roll

Reverse roll

Hold Downs

- Optional upon request; 2 hold down brackets will be provided for each shade when requested.
- Types of Hold Downs available

- **Traditional Hold Down**

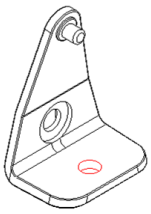

- **Magnetic Hold Down for blinds installed on a door**
  - Magnetic hold down is optional for both inside and outside mount applications.
  - Not recommended for metal door applications.
  - For Roller Shade installed on door, the magnetic hold down will be supplied by default.
  - The magnet will be pre-installed at the factory on the bottom bar of the rear shade.
  - The magnet catch, which needs to be installed at the job site, can be found in the hardware box.
  - The magnet catch is default supplied in nickel plated colour. Optional colours are available: Pure White, Silk White, Bisque, Pearl, Bright Brass, Antique Brass, Black, Crisp Linen, String, Sea Mist, Stone Gray, Brown Gray, Taupe Gray

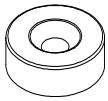

Magnet

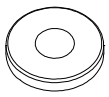

Magnet catch

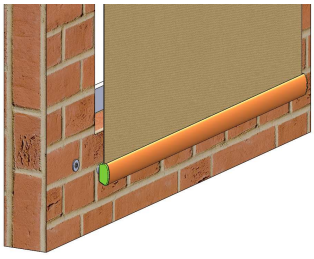

Disclaimer: Nien Made reserves all rights on updating or modification of any contents within this documentation without prior notification.

Shim (Spacer Block)

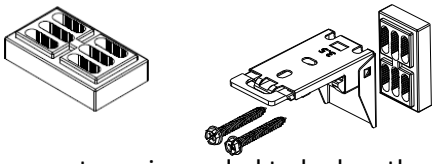

- Optional
- Dimensions: 41mm x 10mm
- Up to 3 Spacer Blocks can be stacked per bracket
- 10mm thickness for one and 18mm thickness for two stacked.

Note: For outside mount with spacer blocks ordered, if the length of the valance returns is needed to be lengthened to cover the spacers, please specify a special note in the order.

Light Guard

- Optional
- Light Guard is specifically designed to block incoming light escaping off the top and sides of the window opening
- Consists of: side light block pieces, top light block piece
- For common valances/fascias ordered with light guard, it will be default supplied with one set light guard.

Side/Vertical Piece

Type	Dimensions	Available Colours
Basic	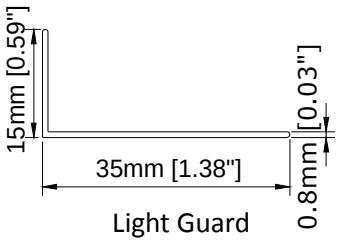 Light Guard 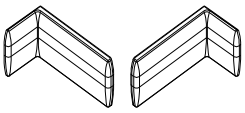 End Cap	NO. / Colour Code / Colour Name 1 / 3058 / White 2 / 3094 / Cottage White 3 / 3578 / Sahara 4 / 3129 / Silver 5 / 3463 / Chocolate 6 / 3212 / Black Ink **Note:** 1. End Cap will be pre-installed on the top of light guard. 2. When light guard length (L) > 2438mm, it will be spliced to 2 parts, the rules are as follow. 2438mm < L≦ 2591mm: Top length = 152mm, Bottom length = L -152mm L > 2591mm: Top length = L - 2438mm, Bottom length = 2438mm

Top/Horizontal Piece

Item	Size	Colour
Top PVC Light Block Piece	114mm	Used for Single Shade Standard colour: White
Top RD-Fabric Light Block piece	190.5mm	Used for Dual Shade White RD fabric will be provided as the light blocking piece

Disclaimer: Nien Made reserves all rights on updating or modification of any contents within this documentation without prior notification.

Minimum Mounting Depth Requirements for Roller Shades with Light Guard

	CCL with 29mm Tube	CCL with 43mm Tube/ Motorised with 43mm Tube	CCL with 52mm Tube/ Motorised with 52mm Tube	Cordless
Without Top Treatment	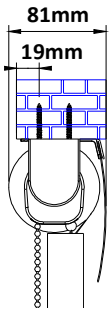	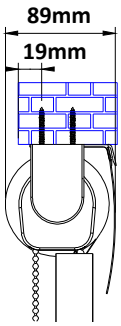	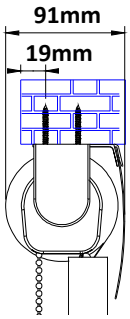	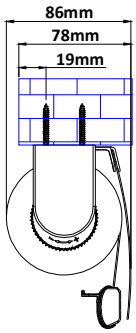
With Raceway	**CCL with 29mm Clutch**	**CCL with 43mm Clutch / SmartRelease™ with 52mm Clutch/ Motorised with 52mm Tube**	**SmartRelease™ with 43mm Clutch / Motorised with 43mm Tube**	**Cordless**
	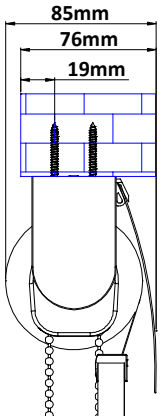	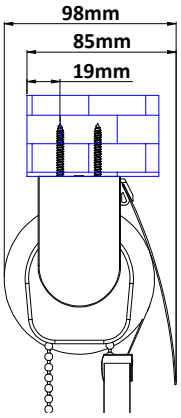	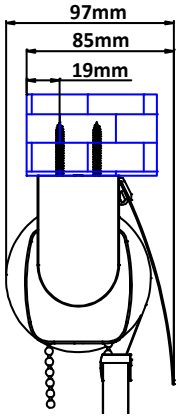	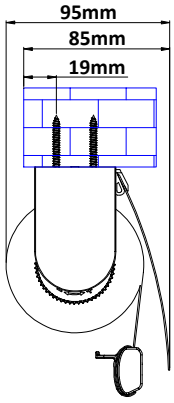

Disclaimer: Nien Made reserves all rights on updating or modification of any contents within this documentation without prior notification.

11. Motorisation

11.1 AutoWand™ Motorisation

<table>
<tr><th>Component</th><th>Specification</th><th>Drawing</th></tr>
<tr><td>AM25 Motor</td><td>· Motor with electrically rechargeable lithium ion batteries included as an inherent part of the motor.
· Charged by Micro USB charging cable (included) and customer’s own 5V USB charger via wand handle.
· Available for all shade types
· Motor position: Left or Right
· Utilizes a 43mm or 52mm tube; 52mm tube will be used when the width exceeds 2438mm.
· Size limitation:
<table>
<tr><th>Tube Size</th><th>Min Width</th><th>Max Width</th><th>Min Height</th><th>Max Height</th></tr>
<tr><td>43mm</td><td>559mm</td><td>2438mm</td><td>305mm</td><td>3657mm</td></tr>
<tr><td>52mm</td><td>559mm</td><td>2997mm</td><td>305mm</td><td>3657mm</td></tr>
</table></td><td> 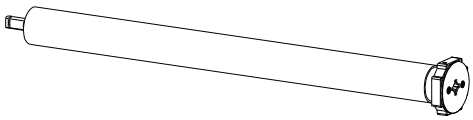 </td></tr>
<tr><td>Control Wand</td><td>· Optional colours: White, Cottage White, Black
· With Micro USB charging port under the bottom of handle.
· Wand Length:
<table>
<tr><th></th><th>Order Length (Y)</th><th>Wand Length</th></tr>
<tr><td>Default</td><td>All shade heights</td><td>610mm</td></tr>
<tr><td>Optional</td><td>All shade heights</td><td>610mm / 1220mm / 1524mm/1828mm</td></tr>
</table></td><td> </td></tr>
<tr><td>Hook</td><td>· Optional colours: White, Cottage White, Black · Installed on wall to hang the control wand</td><td> </td></tr>
<tr><td>Ring</td><td>· Optional colours: White, Cottage White, Black · Connected the control wand and hook
· Allows wand to face any direction
· Included by default, but optional to use</td><td> </td></tr>
<tr><td>Micro USB Charging Cable</td><td colspan="2">· Colour: White only
· Length: 2M
· Default supplied as 1 pc per order.</td></tr>
</table>

Disclaimer: Nien Made reserves all rights on updating or modification of any contents within this documentation without prior notification.

11.2 Norman Smart motorisation

<table>
<tr><th>Component</th><th>Specification</th><th>Drawing</th></tr>
<tr><td>AC Adapter Plug-In (MRS-32A Motor)</td><td>· No battery inside the motor.
· Motor is powered by 36W or 65W Adapter plug-in.
· Button box colours: White, Black
· Available for all shade types
· Utilizes a 43mm or 52mm tube; 52mm tube will be used when the width exceeds 2438mm.
· Motor location: Left or Right
· Size limitation:
<table>
<tr><th>Tube Size</th><th>Min Width</th><th>Max Width</th><th>Min Height</th><th>Max Height</th></tr>
<tr><td>43mm</td><td>407mm</td><td>2438mm</td><td>305mm</td><td>3657mm</td></tr>
<tr><td>52mm</td><td>407mm</td><td>2997mm</td><td>305mm</td><td>3657mm</td></tr>
</table>
· Max qty of channels per motor can be set: 5</td><td> 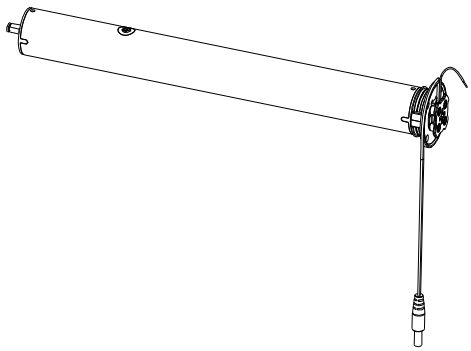 </td></tr>
<tr><td>36W Adapter</td><td>· Cable length: 1.5M
· Colour: Black
· Available for all motors</td><td> 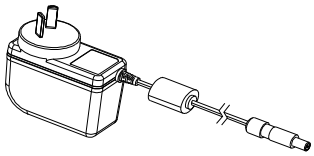 </td></tr>
<tr><td>36W Adapter Connector Cord</td><td>· Colour: Black
· Length: 100mm
· Used together with 36W Adapter for MRS-32A motor.</td><td> </td></tr>
<tr><td>36W Adapter Extension Cord (Optional)</td><td>· Colour: Black
· Cable length: 2M
· Used for all 36W Adapters</td><td> </td></tr>
<tr><td>65W Adapter</td><td>· Colour: Black
· Length: 1.22M
· Used with 65W AC power cord for MRS-32A motor</td><td> </td></tr>
<tr><td>65W Adapter AC Power Cord</td><td>· Colour: Black
· Cable length: 1.83M
· Used with 65W Adapter for MRS-32A motor</td><td> 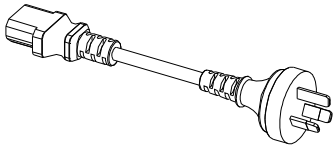 </td></tr>
<tr><td>65W Adapter Extension Cord (Optional)</td><td>· Colour: Black
· Cable length: 2M
· Used for 65W Adapter</td><td> </td></tr>
</table>

Disclaimer: Nien Made reserves all rights on updating or modification of any contents within this documentation without prior notification.

<table>
<tr><th>Component</th><th>Specification</th><th>Drawing</th></tr>
<tr>
<td>Rechargeable Battery with Charging Wands (MRS-32B Motor)</td>
<td>
· Motor with electrically rechargeable lithium ion batteries included as an inherent part of the motor.
· Charged by Power Charger
· Charging port colours: White (2058), Cottage White (2094), Black (2208), Silver (2129), Nature (2579), Sahara (2578), Terra (2334), Chocolate (2463)
· Utilizes a 43mm or 52mm tube; 52mm tube will be used when the width exceeds 2438mm.
· Motor location: Left or Right
· Socket position: front or side
· Size limitation:
<table>
<tr><th>Tube Size</th><th>Min Width</th><th>Max Width</th><th>Min Height</th><th>Max Height</th></tr>
<tr><td>43mm</td><td>610mm</td><td>2438mm</td><td>305mm</td><td>3657mm</td></tr>
<tr><td>52mm</td><td>610mm</td><td>2997mm</td><td>305mm</td><td>3657mm</td></tr>
</table>
· Max qty of channel per motor can be set: 5
· Not available for Dual Shades, LG360 system and Cassette.
· For the charging port with socket at front, it is not available for the shades with 152mm/178mm fabric valance and reversed fabric roll. And the fascias/valances cannot cover the charging port.
· For the charging port with socket at side, it is available for all fascias / valances and reversed fabric roll. And there will be only 152mm & 178mm fabric valance can cover the charging port.
</td>
<td>
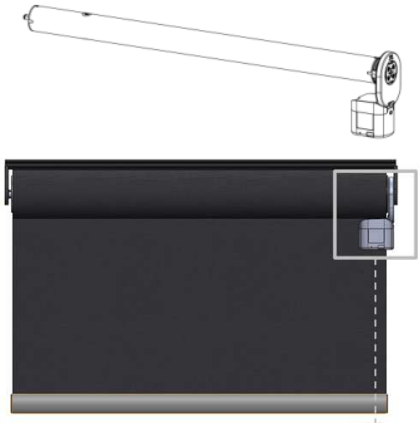
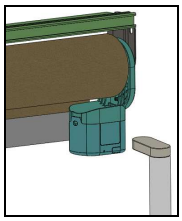
Socket at front
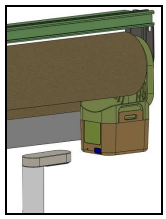
Socket at side
</td>
</tr>
<tr>
<td>Rechargeable Battery with Charging Wands (MRS-32B Motor with External Charging Port)</td>
<td>
· Available for LG360 system only.
· Motor with electrically rechargeable lithium ion batteries included as an inherent part of the motor.
· Charged by Power Charger
· Charging port colors: White, Black, Silver, Cottage White
· Utilizes a 43mm or 52mm tube; 52mm tube will be used when the width exceeds 2438mm.
· Motor location: Left or Right
· Socket position: front only
· Size limitation:
<table>
<tr><th>Tube Size</th><th>Min Width</th><th>Max Width</th><th>Min Height</th><th>Max Height</th></tr>
<tr><td>43mm</td><td>610mm</td><td>2438mm</td><td>305mm</td><td>3657mm</td></tr>
<tr><td>52mm</td><td>610mm</td><td>2997mm</td><td>305mm</td><td>3657mm</td></tr>
</table>
· Max qty of channel per motor can be set: 5
</td>
<td>
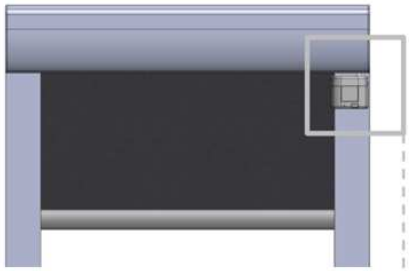
External Charging Port
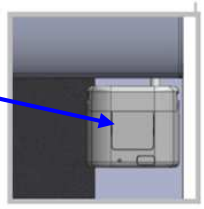
</td>
</tr>
</table>

Disclaimer: Nien Made reserves all rights on updating or modification of any contents within this documentation without prior notification.

Component	Specification	Drawing
Wireless Charging Wand(Cordless) (Power Charger (PB-01S))	· Optional · Including a built-in rechargeable Li-ion battery. · Colour: Black only · Power wand length: 900mm · 1pc Power Charger + 1pc 36W AC adapter (used for charging wand (Power Charger)) · Used for charging MRS-32B motor · For the wireless charging wand, please do not use it to charge the shade while it is being charged/plugged into the outlet.	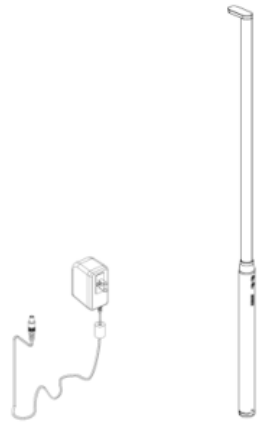
Wired Charging Wand (Plug-in) (Power Charger (PB-02))	· Optional · No battery inside the PB-02. Please plug the 36W AC adapter securely into wall outlet when you recharge the shade. · Colour: Black only · Power wand length: 900mm · 1pc Power Charger + 1pc 36W AC adapter (used for charging wand(Power Charger)) + 1pcs extension cable(cable length: 2M) · Used for charging MRS-32B motor	
Extension Pole	· Optional · Length: 910mm · Colour: Black only · Used to extend the Wired and Wireless Charging Wand.	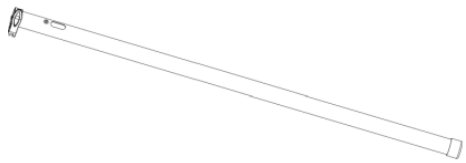
Rechargeable Battery with AC Adapter Charger (MRS-32C Motor)	· **Available for all shade types.** · Motor with electrically rechargeable lithium ion batteries included as an inherent part of the motor. · Charged by 36W adapter and 32C's adapter connector cord (cable length: 150mm). 36W adapter extension cord is optional. · Utilizes a 43mm or 52mm tube; 52mm tube will be used when the width exceeds 2438mm. · Motor location: Left or Right · Size limitation: · Max qty of channel per motor can be set: 5	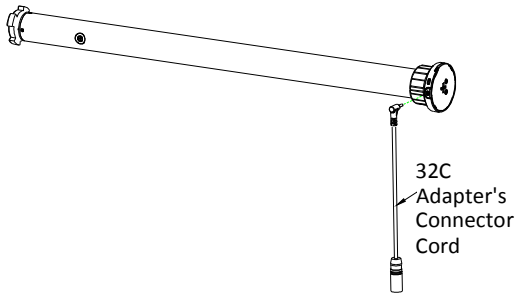

Tube Size	Min Width	Max Width	Min Height	Max Height
43mm	610mm	2438mm	305mm	3657mm
52mm	610mm	2997mm	305mm	3657mm

Disclaimer: Nien Made reserves all rights on updating or modification of any contents within this documentation without prior notification.

Component	Specification	Drawing
Basic Remote RC-A01 & Remote Holder	· Colour: Black only · RF technology operates shade up to 20meters in the open space and 10 meters in the indoor visual line. · Total 5 channels available. · Each channel can be paired with one or multiple shades. · Max recommended qty of channel per shade: 5 · Program at the factory before shipping. · Pre-installed with batteries (CR2032 x2pcs) · Compatible with the above motors. · Default "All" button controls all shades at same time. · It is recommended to pair same lift type of shades in same group to ensure the best use experience. · When order selects remote, the remote holder will be supplied together with remote by default.	
SmartDial TM G2 Remote	SmartDial TM G2 Remote: · Radio Frequency · Colour: Black only · Pre-installed with batteries (CR2032 x2pcs) · Total 5 channels available. · Each channel can be paired with one or multiple shades · Program at the factory before shipping.	
ShadeAuto Hub	· Optional · Colour: Black · Max Accounts per Hub:10 · Standard included: 1pc adapter + 1 USB cable · Connect via Wi-Fi router or Ethernet · Need to work with ShadeAuto App. · It is recommended one Hub be installed on each floor/level.	
Repeater	· Optional · Colour: black · Perfect for multi-story homes or buildings · Easy plug & play operation (no pairing needed) · Bi-directional (receives motors' feedback) · Standard included: 1pc adapter · It is recommended to deploy each room with a repeater; If the distance is more than 32.8'(10 meters), add one more repeater.	

Note: The order can be ordered with "no remote" for whole order and use the existing remote.

Disclaimer: Nien Made reserves all rights on updating or modification of any contents within this documentation without prior notification.

12. Mounting Depth Illustrations

12.1: Minimum Depth Requirement for Inside Mount:

Mounting Depth Shades with None Top Treatments:

No top treatment CCL with 29mm Clutch	No top treatment CCL with 43mm Clutch	No top treatment Motorised with 43mm Tube	No top treatment Motorised with 52mm Tube	No top treatment Cordless
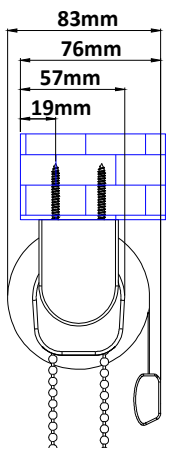	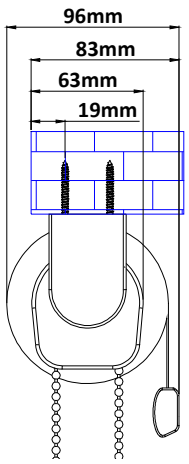	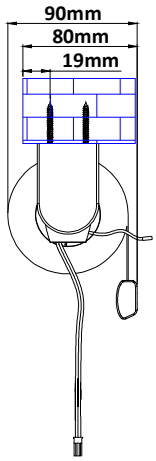	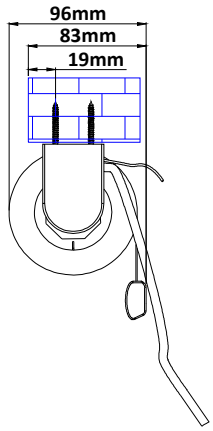	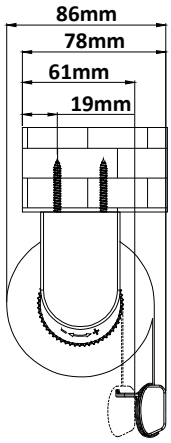

Mounting Depth Shades with Raceway:

Raceway CCL with 29mm Clutch	Raceway CCL with 43mm Clutch	Raceway Motorised with 43mm Tube	Raceway Motorised with 52mm Tube	Raceway Cordless	Raceway SmartRelease™ with 43mm Clutch	Raceway SmartRelease™ with 52mm Clutch
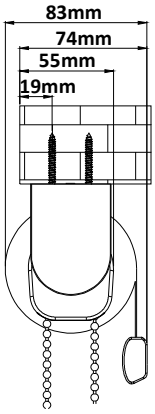	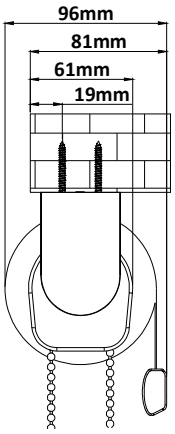	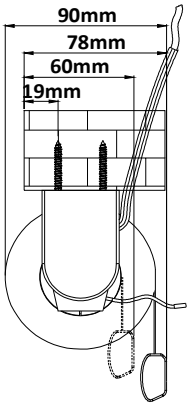	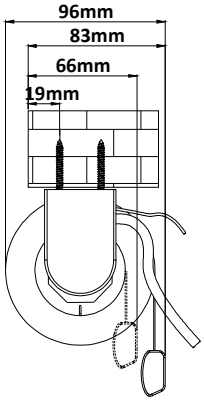	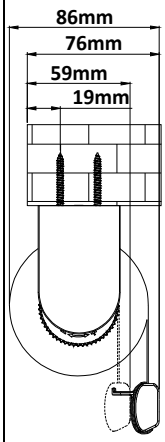	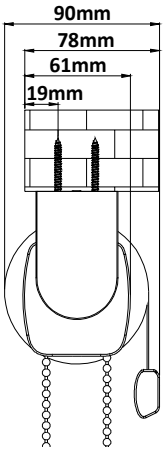	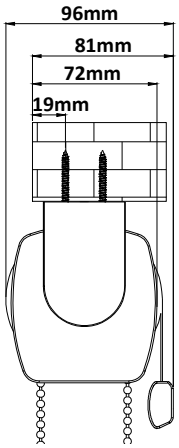

Disclaimer: Nien Made reserves all rights on updating or modification of any contents within this documentation without prior notification.

Mounting Depth Shades with Fascia:

89mm Fascia CCL with 29mm Clutch	89mm Fascia CCL with 43mm Clutch	89mm Fascia Motorised with 43mm Tube	89mm Fascia Motorised with 52mm Tube	89mm Fascia Cordless	89mm Fascia SmartRelease™ with 43mm Clutch
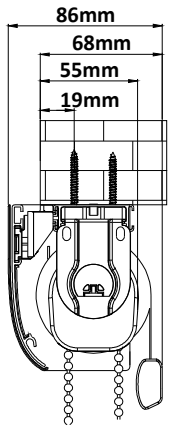	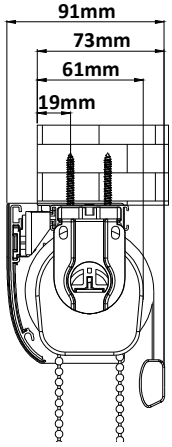	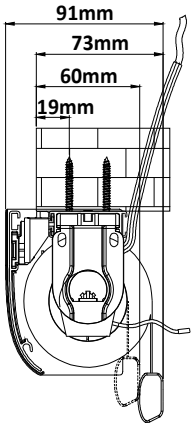	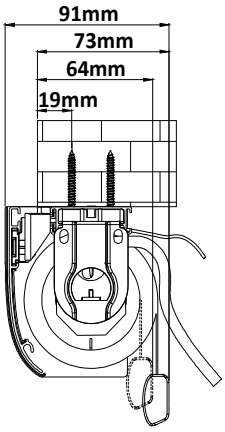	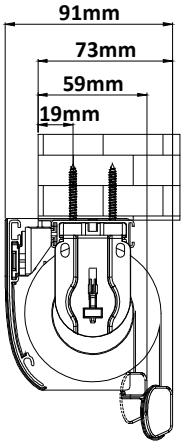	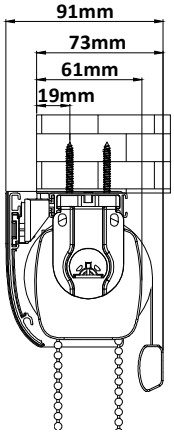

114mm Fascia CCL with 29mm Clutch	114mm Fascia CCL with 43mm Clutch	114mm Fascia Motorised with 43mm Tube	114mm Fascia Motorised with 52mm Tube
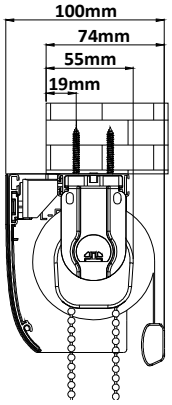	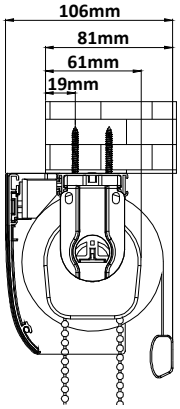	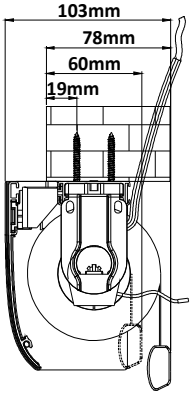	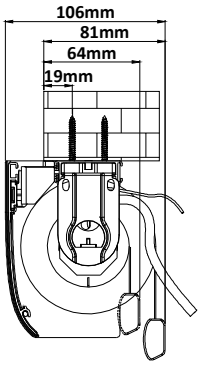

114mm Fascia Cordless	114mm Fascia SmartRelease™ with 43mm Clutch	114mm Fascia SmartRelease™ with 52mm Clutch
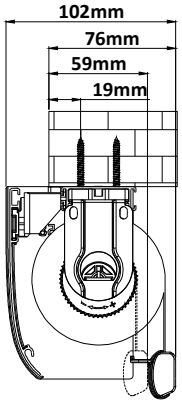	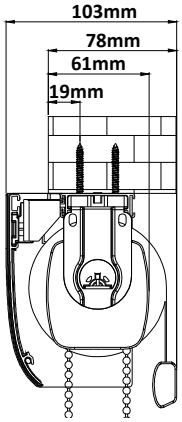	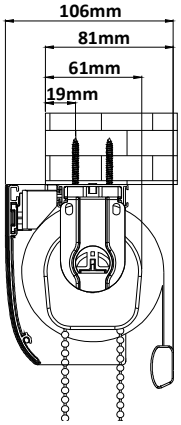

Disclaimer: Nien Made reserves all rights on updating or modification of any contents within this documentation without prior notification.

Mounting Depth Shades with Valance:

Fabric Valance CCL with 29mm Clutch Smaller valance bracket /Large valance bracket	Fabric Valance CCL with 43mm Clutch Smaller valance bracket /Large valance bracket
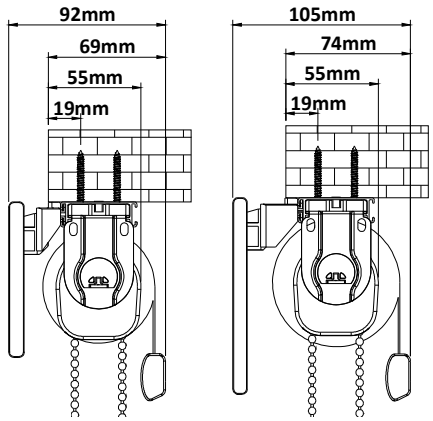	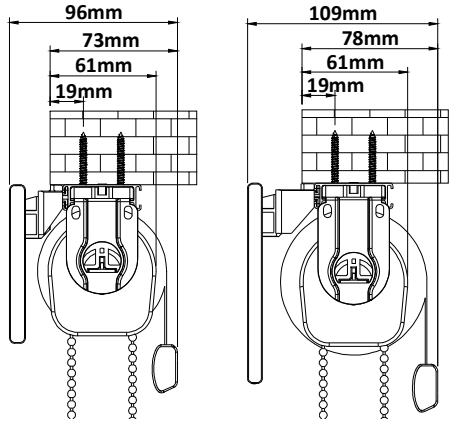
Fabric Valance Motorised Smaller valance bracket /Large valance bracket	**Fabric Valance Cordless Smaller valance bracket /Large valance bracket**
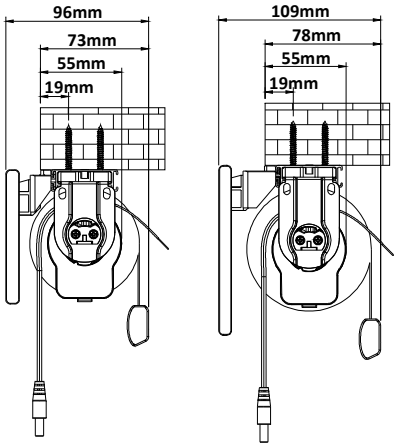	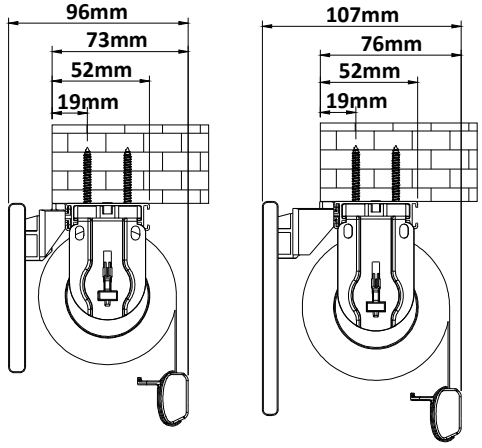
Fabric Valance SmartRelease™ with 43mm Clutch Smaller valance bracket /Large valance bracket	**Fabric Valance SmartRelease™ with 52mm Clutch**
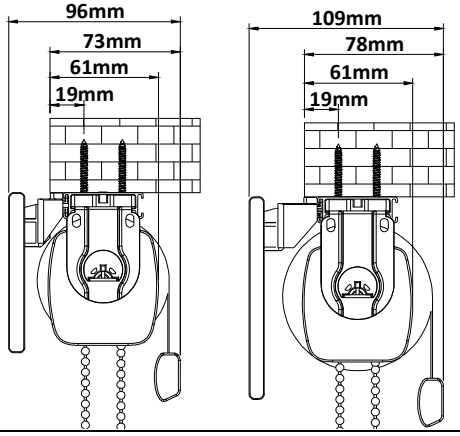	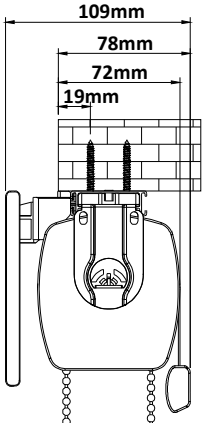

Disclaimer: Nien Made reserves all rights on updating or modification of any contents within this documentation without prior notification.

Modern Valance
CCL with 29mm Clutch
Small Diameter / Large Diameter

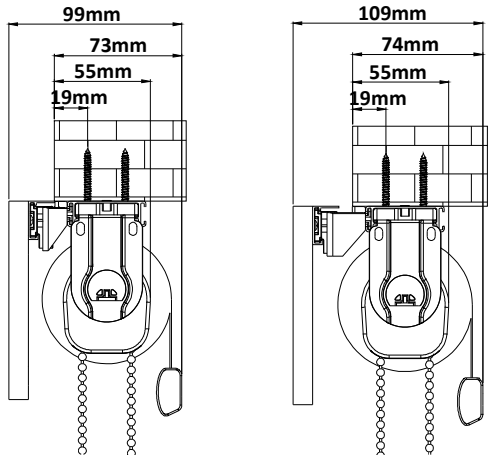

Modern Valance
CCL with 43mm Clutch
Small Diameter / Large Diameter

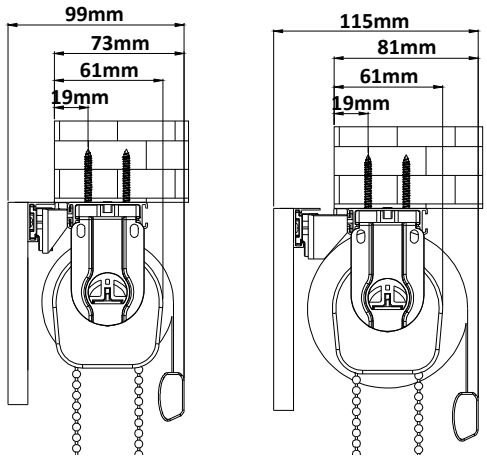

Modern Valance
Motorised with 43mm Tube
Small Diameter / Large Diameter

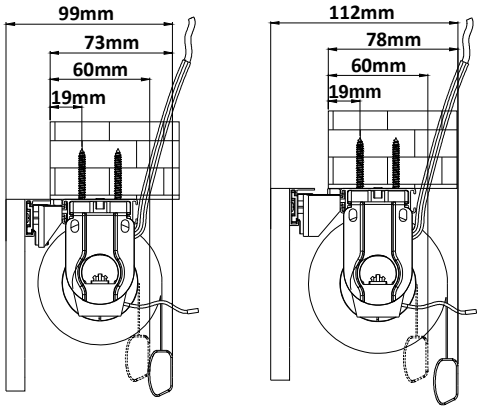

Modern Valance
Motorised with 52mm Tube
Small Diameter / Large Diameter

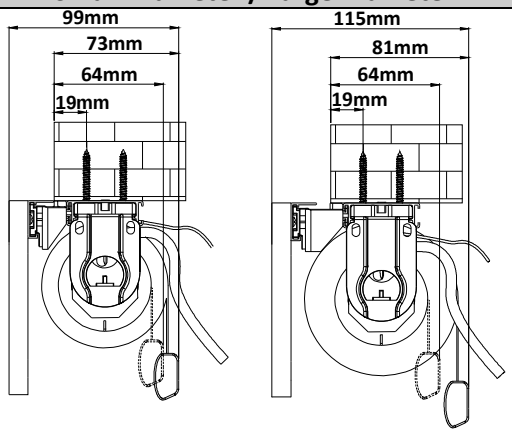

Modern Valance
Cordless
Smaller valance bracket/Large valance bracket

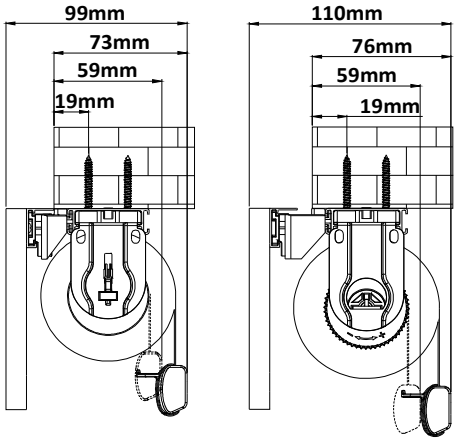

Modern Valance
SmartRelease™ with 43mm Clutch
Smaller valance bracket/Large valance bracket

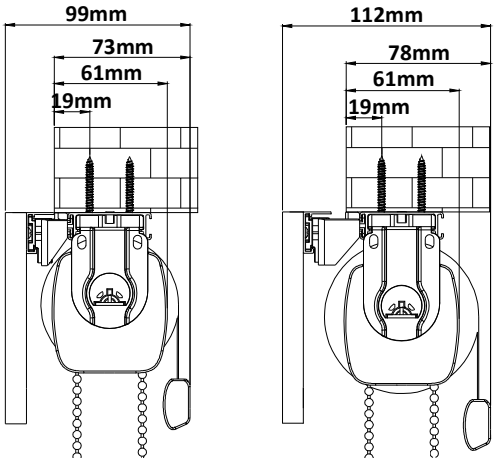

Modern Valance
SmartRelease™ with 52mm Clutch

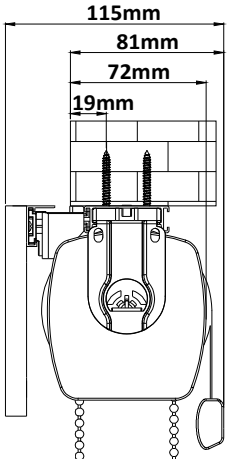

Disclaimer: Nien Made reserves all rights on updating or modification of any contents within this documentation without prior notification.

Mounting Depth Dual Shades:

Dual Roller CCL with 29mm Clutch	Dual Roller CCL with 43mm Clutch	Dual Roller Motorised with 43mm Tube
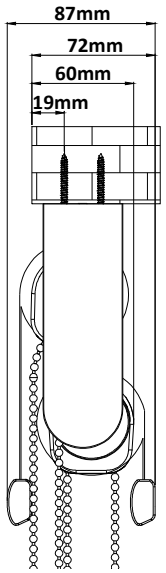	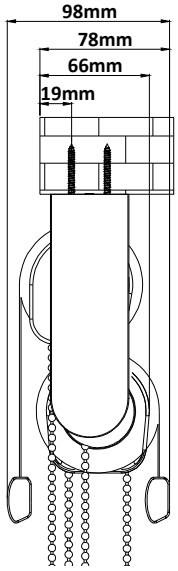	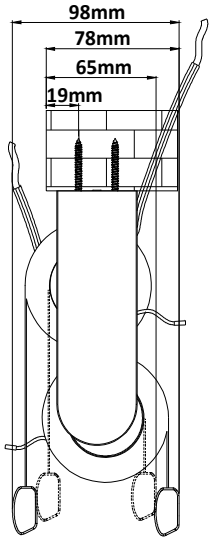
Dual Roller Cordless	**Dual Roller SmartRelease™ with 43mm Clutch**	**Dual Roller with Valance CCL with 29mm Clutch**
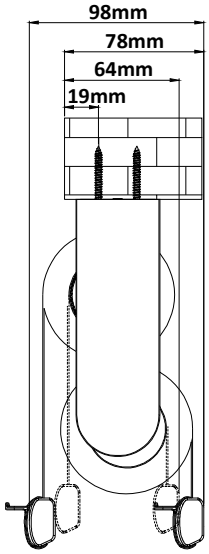	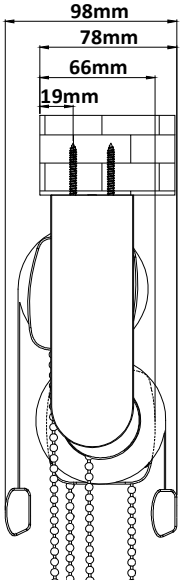	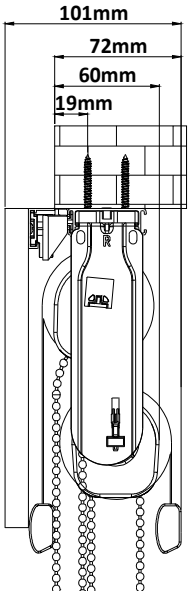

Disclaimer: Nien Made reserves all rights on updating or modification of any contents within this documentation without prior notification.

Dual Shade with Valance
CCL with 43mm Clutch
Small Valance Bracket / Large Valance Bracket

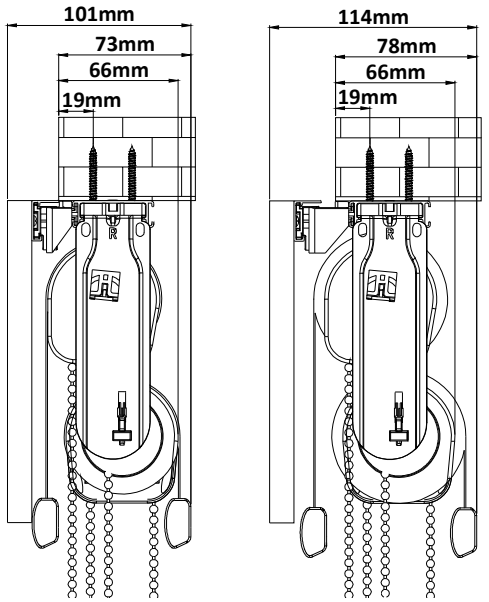

Dual Shade with Valance
Motorised with 43mm Tube
Small Valance Bracket / Large Valance Bracket

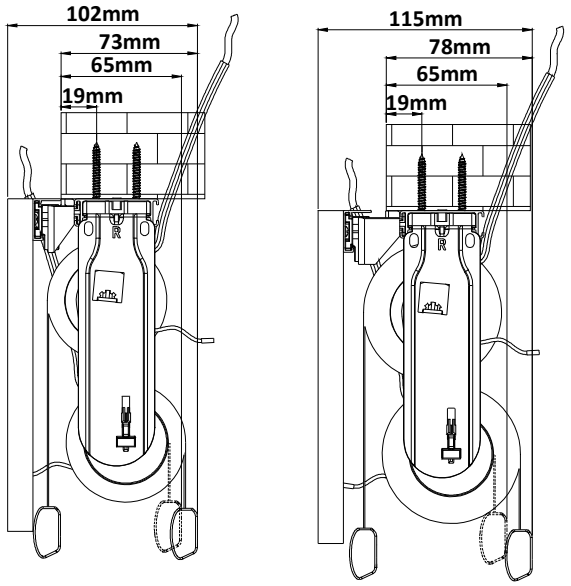

Dual Shade with Valance
Cordless
Small Valance Bracket / Large Valance Bracket

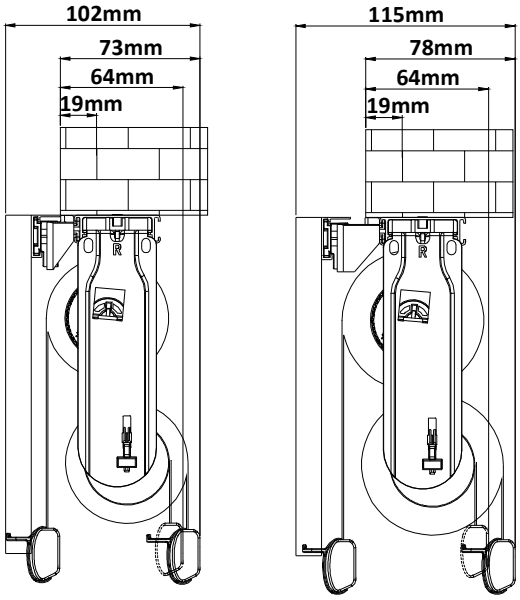

Dual Shade with Valance
SmartRelease™ with 43mm Clutch
Small Valance Bracket / Large Valance Bracket

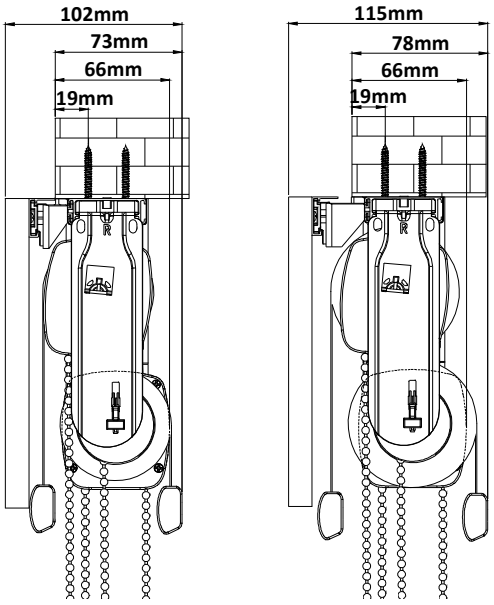

Disclaimer: Nien Made reserves all rights on updating or modification of any contents within this documentation without prior notification.

12.2: Minimum Space Requirement for Outside Mount:

Without Top Treatment:

Mounting area height: 53mm

Mounting space:

Shade with 29mm tube--mounting space height: 60mm

Shade with 43mm / 52mm tube--mounting space height: 66mm

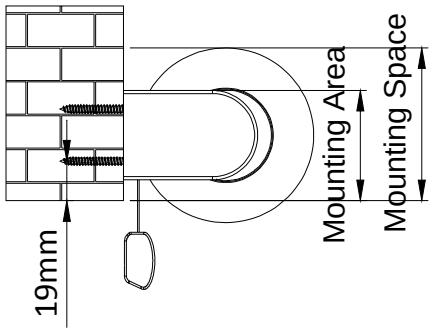

With Top Treatment:

Minimum mounting space height: 38mm

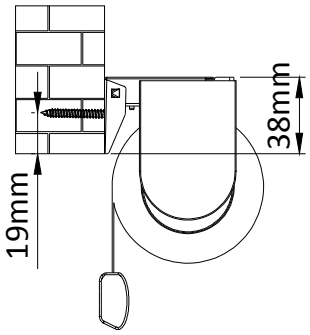

12.3 Minimum shade height requirement for rechargeable battery with charging wands:

For roller shade ordered with rechargeable battery with charging wands (MRS-32B Motor), there is a minimum shade height required for shades installed within bottom front edge of the window / windowsills / obstacles.

System		Min shade height	
		Wireless Charging Wand	Wired Charging Wand
Roller without Top Treatment / with Raceway	48.2mm Shade Bracket	1004 mm	1039mm
	54.7mm Shade Bracket	1011 mm	1046 mm
	61.7mm Shade Bracket	1025 mm	1060 mm
Roller with Fascias/ Valances	89mm Fascia/Valance	1022 mm	1057 mm
	114mm Fascia/Valance	1036 mm	1071 mm
LightGuard 360™	89mm Housing	1031 mm	1066 mm
	114mm Housing	1053 mm	1088 mm
Note: If extension pole is ordered, it needs to add 856mm to above Min height size.			

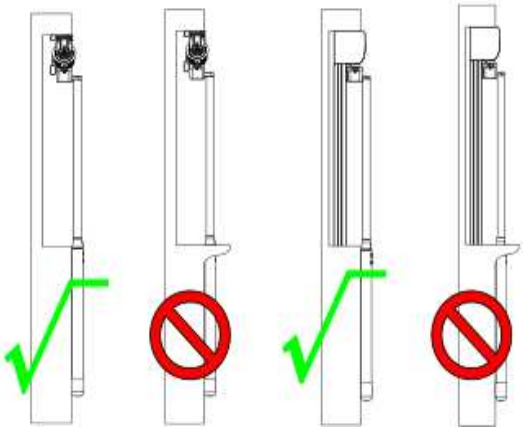

Disclaimer: Nien Made reserves all rights on updating or modification of any contents within this documentation without prior notification.

For outside mount, if the shade with charging port socket at front installed within front edge of the bottom windowsills / obstacles and height size is less than the above min height size, the max protruded size of the bottom windowsills / obstacles is as below:

System		Max Protruded Size
Roller without Top Treatment	48.2mm Shade Bracket	54mm
	54.7mm Shade Bracket	60mm
	61.7mm Shade Bracket	67mm
Roller with Raceway	89mm Mounting Bracket	60mm
	114mm Mounting Bracket	67mm
LightGuard 360™		76mm

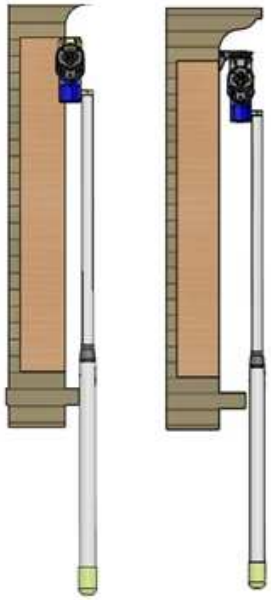

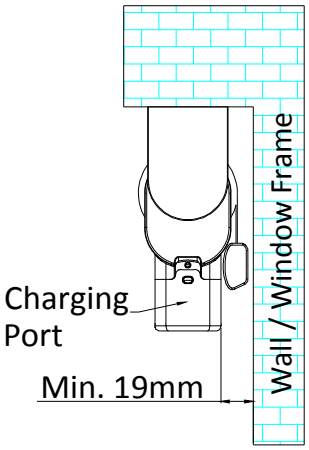

It needs to leave at least 19mm of space behind the charging port for the bottom rail.

Disclaimer: Nien Made reserves all rights on updating or modification of any contents within this documentation without prior notification.

13. Colour Coordination Chart

Fabric				Continuous Cord Loop, SmartRelease™, Cordless, & Motorised	
Collection Name	Fabric Code	Colour Code	Colour Name	General Hardware/Bottom Rail /Fascia/Plain Bottom Rail End Cap/ /Plain Curved Fascia End Cap/ Square Fascia End Cap	Plastic Bead Chain/ Fabric-wrapped Bottom Rail End Cap/Curved Fascia with fabric End Cap/ Charging Port of MRS-32B
Dazzle	AA0353	F1538	Soft White	White	2058 White
		F1539	Eggshell	Cottage White	2094 Cottage White
		F1540	Pewter Green	White	2058 White
		F1541	Charcoal	Black	2463 Chocolate
		F1542	Ink	Black	2208 Black
Lakeshore	AA0357	F1642	Natural Gray	White	2129 Silver
Sheer	AB0616	F0838	Onyx	Black	2208 Black
	AB0632	F0908	Linen Weave	White	2058 White
Scarlett	AB0674	F1599	Cottage Linen	White	2058 White
		F1600	Seashell	Cottage White	2094 Cottage White
		F1601	Crema	Cottage White	2094 Cottage White
		F1602	Stone	Black	2334 Terra
Phuket	A90103	F0656	Snow White	White	2058 White
		F0657	Honey	Cottage White	2578 Sahara
		F0659	Black Olive	Black	2208 Black
		F0660	Grey Fog	White	2058 White
		F0661	Dust	Cottage White	2578 Sahara
		F0868	Dough	Cottage White	2094 Cottage White
		F1670	Mocha	Cottage White	2463 Chocolate
Bora Bora	A90104	F0662	Seashell White	White	2058 White
		F0663	Straw	Cottage White	2094 Cottage White
		F0869	Cinnamon	Cottage White	2463 Chocolate
Bali	A90105	F0668	Black Walnut	Black	2208 Black
		F1668	Sand	Cottage White	2094 Cottage White
		F1669	Flax	White	2334 Terra
Sumatra	AB0605	F0854	Fog	Black	2208 Black
Aruba	AB0606	F0860	Sparkle Ivory	Cottage White	2094 Cottage White
		F0861	Sparkle Khaki	Cottage White	2578 Sahara
		F0862	Sparkle Espresso	Black	2208 Black
Samoa	AB0607	F0863	Daylight	White	2058 White
		F0864	Sand	Cottage White	2094 Cottage White
		F0865	Cumin	Cottage White	2094 Cottage White
		F0866	Old Teak	Black	2208 Black
Caroline	AB0608	F0867	White sand	White	2058 White

Disclaimer: Nien Made reserves all rights on updating or modification of any contents within this documentation without prior notification.

Fabric				**Continuous Cord Loop, SmartRelease™, Cordless, & Motorised**	
Collection Name	Fabric Code	Colour Code	Colour Name	General Hardware/Bottom Rail /Fascia/Plain Bottom Rail End Cap/ /Plain Curved Fascia End Cap/ Square Fascia End Cap	Plastic Bead Chain/ Fabric-wrapped Bottom Rail End Cap/Curved Fascia with fabric End Cap/ Charging Port of MRS-32B
Java	AB0609	F0856	Raffia	Cottage White	2463 Chocolate
		F0857	Haystack	Cottage White	2094 Cottage White
		F0858	Natural	Cottage White	2578 Sahara
		F0859	Sage	White	2058 White
		F1562	Toasted Brown	Cottage White	2578 Sahara
Riviera	AB0651	F1290	Frost	White	2058 White
		F1291	Sugar Cane	White	2058 White
		F1292	Honey	Cottage White	2578 Sahara
		F1293	Metal	Black	2208 Black
		F1713	Silver Fox	Cottage White	2094 Cottage White
Maui	AB0669	F1543	Vanilla Stripe	White	2058 White
		F1544	Natural Stripe	Cottage White	2334 Terra
		F1545	Slate Stripe	Black	2129 Silver
	AB0671	F1548	Ink/Natural	Black	2208 Black
		F1549	Coffee/Natural	Black	2208 Black
Bahamas	AB0670	F1546	Wheat	Cottage White	2094 Cottage White
		F1547	Steel	Black	2129 Silver
Lake Tahoe	AB0673	F1577	Stone	White	2058 White
Catalina	AB0675	F1605	Sea Salt	White	2058 White
		F1712	Oatmeal	Cottage White	2578 Sahara
Cove	AB0682	F1714	Jet Black	Black	2208 Black
Valerie	AA0317	F0738	Moonscape	White	2058 White
		F0739	Cove	White	2334 Terra
		F0740	Dolphin	White	2129 Silver
		F0741	Pomegranate	Black	2208 Black
		F0742	Sapphire	Black	2208 Black
		F0743	Silhouette	Black	2208 Black
Hayes	AA0318	F0747	Maple	Cottage White	2334 Terra
		F0748	Hickory	Cottage White	2094 Cottage White
		F0749	Birch	Black	2208 Black
		F0751	Mahogany	Black	2208 Black

Disclaimer: Nien Made reserves all rights on updating or modification of any contents within this documentation without prior notification.

Fabric				**Continuous Cord Loop, SmartRelease™, Cordless, & Motorised**	
Collection Name	Fabric Code	Colour Code	Colour Name	General Hardware/Bottom Rail /Fascia/Plain Bottom Rail End Cap/ /Plain Curved Fascia End Cap/ Square Fascia End Cap	Plastic Bead Chain/ Fabric-wrapped Bottom Rail End Cap/Curved Fascia with fabric End Cap/ Charging Port of MRS-32B
Chelsea	AA0342	F1445	Snow	White	2058 White
		F1446	Cream	White	2058 White
		F1447	Natural	Cottage White	2578 Sahara
		F1448	Stone	Black	2129 Silver
		F1449	Caviar	Black	2208 Black
Sierra	AA0343	F1450	Snow	White	2058 White
		F1451	Cream	White	2058 White
		F1452	Natural	Cottage White	2578 Sahara
		F1453	Stone	Black	2129 Silver
		F1454	Caviar	Black	2208 Black
Amelia	AA0346	F1484	Mist Gray	White	2058 White
		F1485	Heather Gray	Black	2129 Silver
		F1486	Heather Charcoal	Black	2129 Silver
		F1487	Heather Smoke	Black	2208 Black
Lola LF	AA0354	F1551	Porcelain	White	2058 White
		F1552	Almond	Cottage White	2094 Cottage White
		F1553	Light Khaki	White	2058 White
		F1554	Wheat	Cottage White	2334 Terra
		F1555	Platinum	White	2058 White
		F1556	Cement	Cottage White	2129 Silver
		F1557	Pewter	Black	2129 Silver
		F1558	Iron	Black	2208 Black
		F1559	Indigo	Black	2208 Black
Verona LF	AA0356	F1641	Pearl Cotton	White	2058 White
Callie	AA0362	F1734	Pure White	White	2058 White
		F1736	Natural Tan	Cottage White	2579 Nature
		F1737	Silver Ash	White	2129 Silver
		F1738	Pebble Gray	Black	2208 Black
		F1739	Black Iron	Black	2208 Black
Emery	AB0604	F0752	Daylight	White	2058 White
		F0754	Khaki	Cottage White	2094 Cottage White
		F1560	Chiffon	Cottage White	2094 Cottage White
		F1561	Maize	Cottage White	2094 Cottage White

Disclaimer: Nien Made reserves all rights on updating or modification of any contents within this documentation without prior notification.

Fabric				Continuous Cord Loop, SmartRelease™, Cordless, & Motorised	
Collection Name	Fabric Code	Colour Code	Colour Name	General Hardware/Bottom Rail /Fascia/Plain Bottom Rail End Cap/ /Plain Curved Fascia End Cap/ Square Fascia End Cap	Plastic Bead Chain/ Fabric-wrapped Bottom Rail End Cap/Curved Fascia with fabric End Cap/ Charging Port of MRS-32B
Francis	AB0615	F0876	Pearl	Cottage White	2094 Cottage White
		F0877	Barley	Cottage White	2094 Cottage White
		F0878	Sandstone	Cottage White	2578 Sahara
		F0879	Toast	Black	2208 Black
		F0882	Espresso	Black	2208 Black
		F0883	Brownie	Black	2463 Chocolate
		F0884	Oatmeal	Cottage White	2094 Cottage White
		F0885	Doe	Black	2208 Black
		F0886	Shale	Black	2463 Chocolate
		F0888	Black	Black	2208 Black
		F0889	Denim	White	2058 White
Clarissa	AB0629	F0870	Wheat	White	2058 White
		F0871	Platinum	White	2058 White
		F0872	Tobacco Brown	Cottage White	2578 Sahara
		F0873	Sable Brown	Black	2208 Black
	AB0630	F0874	Burlap	White	2058 White
		F0928	Porcelain	White	2058 White
Clarissa	AB0668	F1532	Powder	Cottage White	2579 Nature
		F1533	Steel	Black	2129 Silver
		F1534	Silver Satin	Black	2129 Silver
		F1535	Golden Straw	Black	2578 Sahara
		F1536	Coffee Bean	Black	2463 chocolate
		F1550	Coal	Black	2208 Black
Breeze	AB0631	F0891	Linen Flax	Cottage White	2094 Cottage White
		F0893	Linen Natural	White	2058 White
		F0894	Linen Khaki	Cottage White	2094 Cottage White
		F0895	Linen Dune	Cottage White	2578 Sahara
		F0896	Linen Graphite	Cottage White	2334 Terra
		F0927	Linen Almond Milk	White	2058 White
		F1778	Linen Stone	White	2129 Silver
Brook	AB0638	F1120	Pewter	White	2129 Silver
		F1121	Egret	White	2058 White
		F1122	Smoke	White	2058 White
		F1123	Beige	Cottage White	2094 Cottage White
		F1157	Latte	Cottage White	2094 Cottage White

Disclaimer: Nien Made reserves all rights on updating or modification of any contents within this documentation without prior notification.

Fabric				Continuous Cord Loop, SmartRelease™, Cordless, & Motorised	
Collection Name	Fabric Code	Colour Code	Colour Name	General Hardware/Bottom Rail /Fascia/Plain Bottom Rail End Cap/ /Plain Curved Fascia End Cap/ Square Fascia End Cap	Plastic Bead Chain/ Fabric-wrapped Bottom Rail End Cap/Curved Fascia with fabric End Cap/ Charging Port of MRS-32B
Kendra	AB0652	F0890	LF Foliage	White	2058 White
Shimmer	AB0664	F1436	Goldmine	Black	2334 Terra
		F1437	Starry Night	Black	2463 chocolate
		F1439	Pewter	Black	2129 Silver
		F1440	Midnight	Black	2208 Black
Remy	AB0684	F1746	White Dove	White	2058 White
		F1747	Seashell Gray	White	2129 Silver
		F1748	Dune	Cottage White	2578 Sahara
		F1749	Hickory Bark	Cottage White	2334 Terra
		F1750	Creamy Mocha	Black	2129 Silver
		F1751	Natural Slate	Black	2129 Silver
Fiji	AB0611	F0822	Pure White	White	2058 White
		F0823	Cream/Ash	White	2058 White
		F0824	Flax/Brown	Cottage White	2094 Cottage White
		F0825	Chocolate/Cream	Black	2208 Black
		F0826	Charcoal/Brown	Black	2208 Black
Bermuda	AB0612	F0831	Mushroom	Cottage White	2094 Cottage White
		F0832	Cocoa	Black	2463 Chocolate
		F0834	Charcoal	Black	2208 Black
Jamaica	AB0613	F0827	Latte	White	2058 White
		F0828	Crystal	White	2058 White
		F0829	Biscuit	White	2058 White
Maui	AB0614	F0830	Almond	White	2058 White
Cambria	AB0678	F0850	Ivory	Cottage White	2579 Nature
		F0852	Jet	Black	2208 Black
Glamour	AB0626	F0841	Persimmon	White	2058 White
		F0844	Aquamarine	White	2058 White
		F0848	Violet	White	2058 White
		F1112	Gray	Black	2129 Silver
	AA0358	F0842	Limelight	White	2058 White
		F0845	North Sea	White	2058 White
		F0846	Rose	White	2058 White
		F1108	White	White	2058 White
		F1109	Stone Gray	Black	2129 Silver
		F1110	Broken White	White	2058 White
		F1111	Cloudy Gray	White	2058 White
		F1113	Anthracite Gray	Black	2208 Black

Disclaimer: Nien Made reserves all rights on updating or modification of any contents within this documentation without prior notification.

Fabric				Continuous Cord Loop, SmartRelease™, Cordless, & Motorised	
Collection Name	Fabric Code	Colour Code	Colour Name	General Hardware/Bottom Rail /Fascia/Plain Bottom Rail End Cap/ /Plain Curved Fascia End Cap/ Square Fascia End Cap	Plastic Bead Chain/ Fabric-wrapped Bottom Rail End Cap/Curved with fabric End Cap/ Charging Port of MRS-32B
Garden	AB0653-A	F0853	RD Foliage	White	2058 White
	AB0653	F1514	Winter White	White	2058 White
		F1515	Ecru	White	2579 Nature
		F1516	Cinnamon	Black	2463 Chocolate
		F1517	Forest	Black	2208 Black
		F1518	Midnight	Black	2208 Black
Summerland	AB0666	F1510	Pearl	Cottage White	2094 Cottage White
		F1511	Maize	Cottage White	2094 Cottage White
	AB0666-A	F1512	Sterling	White	2129 Silver
Bridget	AA0303	F1030	Cream	White	2058 White
		F1041	Latte	Cottage White	2578 Sahara
Lola BO	AA0344-A	F1455	Porcelain	White	2058 White
		F1456	Almond	Cottage White	2094 Cottage White
		F1457	Light Khaki	White	2058 White
		F1458	Wheat	Cottage White	2334 Terra
		F1459	Platinum	White	2058 White
		F1460	Cement	Cottage White	2129 Silver
		F1461	Pewter	Black	2129 Silver
		F1462	Iron	Black	2208 Black
		F1463	Indigo	Black	2208 Black
Cory	AA0348	F1479	White	White	2058 White
		F1480	Ivory	Cottage White	2094 Cottage White
		F1481	Sand	White	2058 White
Callie RD	AA0363	F1740	Pure White	White	2058 White
		F1742	Natural Tan	Cottage White	2579 Nature
		F1743	Silver Ash	White	2129 Silver
		F1744	Pebble Gray	Black	2208 Black
		F1745	Black Iron	Black	2208 Black
Remy RD	AB0685	F1752	White Dove	White	2058 White
		F1753	Seashell Gray	White	2129 Silver
		F1754	Dune	Cottage White	2578 Sahara
		F1755	Hickory Bark	Cottage White	2334 Terra
		F1756	Creamy Mocha	Black	2129 Silver
		F1757	Natural Slate	Black	2129 Silver

Disclaimer: Nien Made reserves all rights on updating or modification of any contents within this documentation without prior notification.

Fabric				Continuous Cord Loop, SmartRelease™, Cordless, & Motorised	
Collection Name	Fabric Code	Colour Code	Colour Name	General Hardware/Bottom Rail /Fascia/Plain Bottom Rail End Cap/ /Plain Curved Fascia End Cap/ Square Fascia End Cap	Plastic Bead Chain/ Fabric-wrapped Bottom Rail End Cap/ Curved Fasciawith fabric End Cap/ Charging Port of MRS-32B
Francis RD	AB0687	F1763	Sandstone	Cottage White	2578 Sahara
		F1764	Oatmeal	Cottage White	2094 Cottage White
		F1765	Doe	Black	2208 Black
		F1766	Black	Black	2208 Black
		F1767	Denim	White	2058 White
Breeze RD	AB0688	F1768	Linen Flax	Cottage White	2094 Cottage White
		F1769	Linen Natural	White	2058 White
		F1770	Linen Khaki	Cottage White	2094 Cottage White
		F1771	Linen Dune	Cottage White	2578 Sahara
		F1772	Linen Graphite	Cottage White	2334 Terra
		F1773	Linen Almond Milk	White	2058 White
		F1779	Linen Stone	White	2129 Silver
Amelia RD	AB0689	F1774	Mist Gray	White	2058 White
		F1775	Heather Gray	Black	2129 Silver
		F1776	Heather Charcoal	Black	2129 Silver
		F1777	Heather Smoke	Black	2208 Black
Serene (1%)	AB0639	F1158	Snow White	White	2058 White
		F1150	Silver	White	2129 Silver
		F1149	Umber	Black	2334 Terra
		F1151	Steel	Black	2129 Silver
Flow (1%)	AB0442	F1244	Polar White	White	2058 White
		F1245	Wheat	White	2579 Nature
		F1246	Quarry Stone	White	2129 Silver
		F1247	Ink	Black	2208 Black
Windsong (1%)	AB0444	F1252	Soft White	White	2058 White
		F1253	Canvas	Cottage White	2094 Cottage White
		F1254	Graphite	Black	2208 Black
		F1255	Raven Black	Black	2208 Black
Meadows (1%)	AB0451	F1274	Travertine	White	2579 Nature
		F1275	Mushroom	Black	2208 Black
		F1276	Sun Buff	Black	2463 Chocolate
Serene (3%)	AB0439	F1232	Snow White	White	2058 White
		F1233	Silver	White	2129 Silver
		F1234	Umber	Black	2334 Terra
		F1235	Steel	Black	2129 Silver
Lakeview (3%)	AB0449	F1270	Light Taupe	White	2579 Nature
		F1271	Sand Drift	Cottage White	2334 Terra

Disclaimer: Nien Made reserves all rights on updating or modification of any contents within this documentation without prior notification.

Fabric				**Continuous Cord Loop, SmartRelease™, Cordless, & Motorised**	
Collection Name	Fabric Code	Colour Code	Colour Name	General Hardware/Bottom Rail /Fascia/Plain Bottom Rail End Cap/ /Plain Curved Fascia End Cap/ Square Fascia End Cap	Plastic Bead Chain/ Fabric-wrapped Bottom Rail End Cap/Curved Fascia with fabric End Cap/ Charging Port of MRS-32B
Meadows (3%)	AB0450	F1272	Rustic Brown	Black	2463 Chocolate
		F1273	Earth Brown	Black	2463 Chocolate
Jubilee (3%)	AB0452	F1280	Egg Shell	White	2058 White
		F1277	Sweet Cream	White	2058 White
		F1278	Steel Blue/Beige	Black	2129 Silver
		F1279	Chestnut	Black	2334 Terra
		F1281	Coal	Black	2208 Black
Flow (5%)	AB0640	F1159	Polar White	White	2058 White
		F1152	Wheat	White	2579 Nature
		F1154	Quarry Stone	White	2129 Silver
		F1153	Ink	Black	2208 Black
Windsong (5%)	AB0446	F1260	Soft White	White	2058 White
		F1261	Canvas	Cottage White	2094 Cottage White
		F1262	Nickel	Black	2129 Silver
		F1263	Graphite	Black	2208 Black
		F1264	Eclipse	Black	2208 Black
		F1265	Raven Black	Black	2208 Black
Moon (5%)	AB0667	F1519	Chalk	White	2058 White
		F1520	Pearl Linen	White	2058 White
		F1521	Pearl	Cottage White	2094 Cottage White
		F1522	Pearl Pewter	White	2058 White
		F1523	Charcoal Chestnut	Black	2208 Black
		F1524	Charcoal Gray	Black	2208 Black
		F1525	Raven Black	Black	2208 Black
Serene (7%)	AB0441	F1240	Snow White	White	2058 White
		F1241	Silver	White	2129 Silver
		F1242	Umber	Black	2334 Terra
		F1243	Steel	Black	2129 Silver
Flow (7%)	AB0443	F1248	Polar White	White	2058 White
		F1249	Wheat	White	2579 Nature
		F1250	Quarry Stone	White	2129 Silver
		F1251	Ink	Black	2208 Black
Lakeview (7%)	AB0447	F1266	Flax	White	2579 Nature
		F1267	Yellow Stone	Cottage White	2334 Terra

Disclaimer: Nien Made reserves all rights on updating or modification of any contents within this documentation without prior notification.

Fabric				Continuous Cord Loop, SmartRelease™, Cordless, & Motorised	
Collection Name	Fabric Code	Colour Code	Colour Name	General Hardware/Bottom Rail /Fascia/Plain Bottom Rail End Cap/ /Plain Curved Fascia End Cap/ Square Fascia End Cap	Plastic Bead Chain/ Fabric-wrapped Bottom Rail End Cap/Curved Fascia with fabric End Cap/ Charging Port of MRS-32B
Lakeview (10%)	AB0448	F1268	Frost Gray	Black	2129 Silver
		F1269	Java	Black	2463 Chocolate
Breeze Screen (1%)	AB0464	F1780	Linen Flax	Cottage White	2094 Cottage White
		F1782	Linen Khaki	Cottage White	2094 Cottage White
		F1785	Linen Almond Milk	White	2058 White
		F1786	Linen Stone	White	2129 Silver
Breeze Screen (3%)	AB0465	F1787	Linen Flax	Cottage White	2094 Cottage White
		F1789	Linen Khaki	Cottage White	2094 Cottage White
		F1792	Linen Almond Milk	White	2058 White
		F1793	Linen Stone	White	2129 Silver
A300 (1%)	AB0453	F0357	Pearl/Pewter	White	2058 White
		F0355	Pearl	White	2058 White
		F0356	Pearl/Linen	White	2058 White
		F0358	Charcoal/Chestnut	Black	2208 Black
		F0359	Charcoal/Gray	Black	2208 Black
A400 (1%)	AB0457	F0378	Charcoal	Black	2208 Black
		F0379	Charcoal/Chestnut	Black	2208 Black
		F0380	Charcoal/Gray	Black	2208 Black
A300 (3%)	AB0421	F0361	Pearl/Linen	Cottage White	2094 Cottage White
	AB0454	F0360	Pearl	White	2058 White
		F0362	Pearl/Pewter	White	2058 White
		F0363	Charcoal/Chestnut	Black	2208 Black
		F0364	Charcoal/Gray	Black	2208 Black
A400 (3%)	AB0425	F0381	Chalk	White	2058 White
		F0382	Chalk/Beige	Cottage White	2094 Cottage White
	AB0458	F0384	Charcoal	Black	2208 Black
A100 (3%)	AB0461	F0400	Oyster/Beige	Cottage White	2094 Cottage White
		F0404	Black/Straw	Black	2463 Chocolate
A820 (3%)	AB0462	F0407	Oyster/Pewter	White	2129 Silver
A300 (5%)	AB0455	F0365	Pearl	White	2058 White
		F0367	Pearl/Pewter	White	2058 White
		F0368	Charcoal/Chestnut	Black	2208 Black
		F0369	Charcoal/Gray	Black	2208 Black
	AB0422	F0366	Pearl/Linen	Cottage White	2094 Cottage White
A400 (5%)	AB0459	F0390	Charcoal	Black	2208 Black
		F0391	Charcoal/Chestnut	Black	2208 Black
	AB0426	F0388	Chalk/Beige	White	2058 White
		F0389	Chalk/Pewter	White	2058 White
A300 (10%)	AB0456	F0370	Pearl	White	2058 White
A400 (10%)	AB0460	F0396	Charcoal	Black	2208 Black

Disclaimer: Nien Made reserves all rights on updating or modification of any contents within this documentation without prior notification.

Additional information on colour coordination:

Each fabric has a set of pre-coordinated default hardware colours as above chart. For the component colour with "default" selected, it will be default to coordinate with the main fabric. If you wish to override, please note to choose the colours for all components listed above to avoid on-hold questions.

1. General Hardware in the headrail system includes shade brackets, raceway, end plugs, clutch, bracket covers, tension dial etc. and is available in 3 default colours (White/Cottage White/Black). Optional override is available.
2. The OM mounting brackets is default supplied in nickel plate colour. Optional override is not available.
3. Curved fascia with fabric: The curved fascia is wrapped with fabric at the front but the back is left plain. The curved fascia colour will coordinate with default or custom general hardware colour selected.

* When the curved fascia with default fabric is chosen:
If General Hardware = Default, the fascia colour will be coordinated with main fabric.
If General Hardware = Custom colour, the fascia colour will be supplied as per custom colour.

* When the curved fascia with custom fabric is chosen:
If General Hardware = Default, the fascia colour will be coordinated with custom fabric.
If General Hardware = Custom colour, the fascia colour will be supplied as per custom colour.

4. Fascia End Cap:

* For the square fascia and curved fascia without fabric, the fascia end cap will always match the fascia colour when selecting a fascia with standard colours of White/Cottage White/Black, and it will be default with white end cap when selecting a fascia with anodised silver colour.

* For the curved fascia with fabric, when the curved fascia with default fabric is chosen:
If End cap colour = Default, the fascia end cap colour will be coordinated with the main fabric. If End cap colour =Custom colour, the fascia end cap colour will be supplied as per custom colour.

*For the curved fascia with fabric, when the curved fascia with custom fabric is chosen:
If End cap colour = Default, the fascia end cap colour will be coordinated with the custom fabric. If End cap colour =Custom colour, the fascia end cap colour will be supplied as per custom colour.

5. Fabric-wrapped Bottom Rail: The bottom rail is wrapped with fabric at the front but the back is left plain. The back of fabric-wrapped bottom rail will coordinate with default or custom general hardware colour selected.
If End cap colour = Default, the end cap colour will be match with main fabric as per default colour coordination chart, which the end cap colour may be difference with bottom rail colour. If you want to have same colour of End Cap and bottom rail colour, please select same custom colour for both General Hardware and End Cap colour.
6. Bottom Rail End Caps:

***** For plain bottom rail, the bottom rail end cap will always match with bottom rail colour when selecting a bottom rail with standard colour of White/Cottage White/Black, and it will be default with white end cap when selecting a bottom rail with anodised silver colour.

* For fabric-wrapped bottom rail, the bottom rail end cap will coordinate with the main fabric by default.

7. All lift systems: For all the components on the headrail system (Raceway/ Shade Brackets/ Bracket covers/ Clutch/ Tension Dial/ End Plug, etc.), the colours will coordinate with default or custom general hardware colour – whether or not there is a top treatment.
8. All lift system without raceway/top treatment: There is optional colour of silver available for the general hardware. When Silver general hardware is selected, the bottom rail colour for fabric-wrapped bottom rail will be coordinated with the main fabric by default.
9. Dual shades: The colour of the raceway, dual brackets and bracket covers will be always matched with the general hardware colour of the front shade. Other components such as clutch, end plug, fabric-wrapped bottom rail, etc., will be matched to the general hardware colour ordered for each shade.
10. MRS-32A button box and MRS-32C wire connector box colour: It will be default supplied with white colour when shade
11. MRS-32B charging port colour for non-LG360 shades: It will coordinate with the main fabric by default. Optional override is available.

Disclaimer: Nien Made reserves all rights on updating or modification of any contents within this documentation without prior notification.

14. Shade Size Definition / Size Deductions

Shade Width: Distance from end cap to end cap.

Shade Height: Distance from top of raceway/mounting brackets to bottom of shade when fully open.

Inside Mount

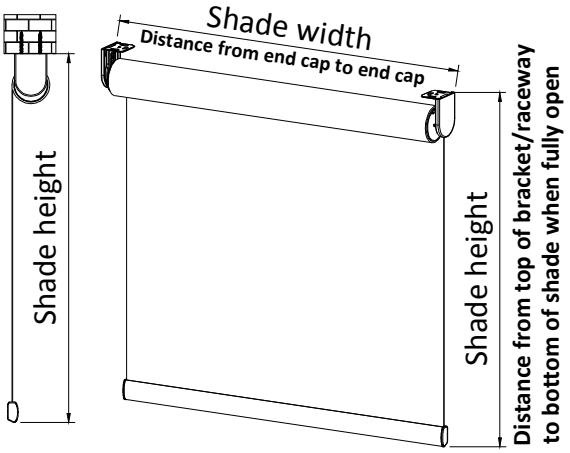

Outside Mount

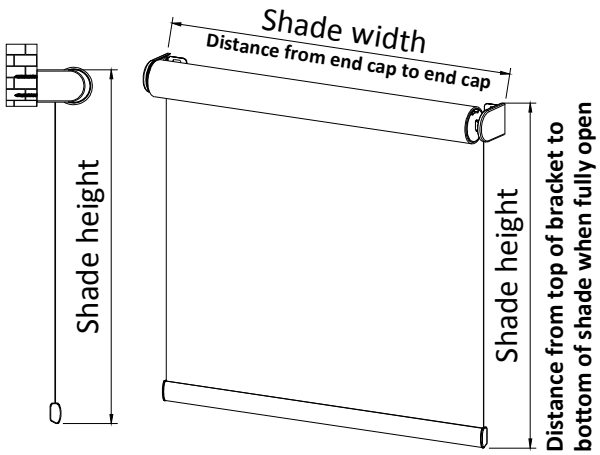

Deductions

Single Shade/Dual Shade		
Lift System	**Inside Mount (IM)**	**Outside Mount (OM)**
All	Shade Width=Order Width-3.2mm Shade Height=Order Height	Shade Width=Order Width Shade Height=Order Height

Coupled Shades		
Lift System	**Inside Mount (IM)**	**Outside Mount (OM)**
All	**Split Equally:** Left/Right Shade Width=(Total Order Width-3.2mm)÷2 **Custom:** Left Shade Width=Left shade Order Width-1.6mm Right Shade Width=Right Shade Order Width-1.6mm Shade Height(all)=Order Height	**Split Equally:** Left/Right Shade Width=Total Order Width÷2 **Custom:** Left Shade Width=Left Shade Order Width Right Shade Width=Right Shade Order Width Shade Height(all)=Order Height

Common Top Treatment		
Lift System	**Inside Mount (IM)**	**Outside Mount (OM)**
All	Left Shade Width=Left shade Order Width-3.2mm Center Shade(s) Width=Center shade(s) Order Width-3.2mm Right Shade Width=Right Shade Order Width-3.2mm Shade Height(all)=Order Height	Left Shade Width=Left shade Order Width Center Shade(s) Width=Center shade(s) Order Width Right Shade Width=Right Shade Order Width Shade Height(all)=Order Height

Disclaimer: Nien Made reserves all rights on updating or modification of any contents within this documentation without prior notification.

Note: 1. For outside mount, to minimize light leakage, the shade should be overlapping the window opening at least 50mm on left & right & bottom sides and plus top "minimum mounting space height" listed under "Minimum Space Requirement for Outside Mount" on page 45.

*For OM LG360, add 108mm to the overall width, and for the height, add 35mm to the bottom and 92mm or 115mm to the top, depending on the housing size. If there is window sill at bottom, the height is no need to add any size to the bottom.

2.

For Roller Shade installed on doors, additional 2mm deduction from each side will apply on the fabric width to min fraying issues. Please select "Installed on door" when you place the order.

Shade Size Tolerance		
Lift System	**Width**	**Height**
Continuous Cord Loop	±2mm	0~+6mm
Cordless		+152mm～229mm
SmartRelease™		Inside Mount: 0~ -6mm Outside Mount: 0~ +6mm
Motorised		

Single Continuous Cord Loop(CCL) - Inside Mount					
Shade Width	**Shade Length**	**Clutch Size**	**Tube Dimensions**	**Shade Type**	**Tube/Fabric Width**
203mm to 1524mm	305mm to 3657mm	29mm	29mm	CCL without top treatment / CCL with raceway	Tube Width=Order Width - 32.5mm
					Fabric Width=Tube Width - 1mm
				CCL with fascia	Tube Width=Order Width - 35.5mm
					Fabric Width=Tube Width - 1mm
				CCL with valance	Tube Width=Order Width - 30.5mm
					Fabric Width=Tube Width - 1mm
203mm to 2438mm		43mm	43mm	CCL without top treatment / CCL with raceway	Tube Width=Order Width - 32.5mm
					Fabric Width=Tube Width - 1mm
				CCL with fascia	Tube Width=Order Width - 35.5mm
					Fabric Width=Tube Width - 1mm
				CCL with valance	Tube Width=Order Width - 30.5mm
					Fabric Width=Tube Width - 1mm
203mm to 2997mm		43mm	52mm	CCL without top treatment / CCL with raceway	Tube Width=Order Width - 33.5mm
					Fabric Width=Tube Width - 1mm
				CCL with fascia	Tube Width=Order Width - 36.5mm
					Fabric Width=Tube Width - 1mm
				CCL with valance	Tube Width=Order Width - 31.5mm
					Fabric Width=Tube Width - 1mm

Note: For outside mount, the fabric width deduction is 3.2mm less than inside mount deduction.

Disclaimer: Nien Made reserves all rights on updating or modification of any contents within this documentation without prior notification.

Single SmartRelease™ - Inside Mount			
Shade Width	**Shade Length**	**Shade Type**	**Tube/Fabric width**
305mm to 2997	305mm to 3657mm	SmartRelease™ with raceway	Tube Width=Order Width - 36mm
			Fabric Width=Tube Width - 1mm
		SmartRelease™ with fascia	Tube Width=Order Width - 39mm
			Fabric Width=Tube Width - 1mm
		SmartRelease™ with valance	Tube Width=Order Width - 34mm
			Fabric Width=Tube Width - 1mm

Note: For outside mount, the fabric width deduction is 3.2mm less than inside mount deduction.

Single PrecisionLift™ Cordless - Inside Mount				
Shade Width	**Shade Length**	**Tube Dimensions**	**Shade Type**	**Tube/Fabric Width**
457mm to 2438mm	305mm to 3048mm	43mm	Cordless without top treatment	Tube Width=Order Width - 27mm
				Fabric Width=Tube Width - 1mm
			Cordless with Fascia	Tube Width=Order Width - 30mm
				Fabric Width=Tube Width - 1mm
			Cordless with Valance	Tube Width=Order Width - 25mm
				Fabric Width=Tube Width - 1mm

Note: For outside mount, the fabric width deduction is 3.2mm less than inside mount deduction.

Single Motorised - Inside Mount					
Motor Type	**Shade Width**	**Shade Length**	**Tube Dimensions**	**Shade Type**	**Tube/Fabric Width**
MRS-32A	407mm to 2997mm	305mm to 3657mm	43mm & 52mm	Motorised without top treatment / Motorised with raceway	Tube Width=Order Width- 31.5mm
					Fabric Width=Tube Width - 1mm
MRS-32B	610mm to 2997mm			Motorised with Fascia	Tube Width=Order Width- 34.5mm
					Fabric Width=Tube Width - 1mm
AM25	559mm to 2997mm			Motorised with Valance	Tube Width=Order Width- 29.5mm
					Fabric Width=Tube Width - 1mm
MRS-32C	610mm to 2997mm	305mm to 3657mm	43mm & 52mm	Motorised without top treatment / Motorised with raceway	Tube Width=Order Width- 33mm
					Fabric Width=Tube Width - 1mm
				Motorised with Fascia	Tube Width=Order Width- 36mm
					Fabric Width=Tube Width - 1mm
				Motorised with Valance	Tube Width=Order Width- 31mm
					Fabric Width=Tube Width - 1mm

Note: For outside mount, the fabric width deduction is 3.2mm less than inside mount deduction.

Inside Mount		
Top Treatment		**Finished Width**
Fascia Width	including end caps	Fascia width = shade width*
		Common fascia width = left/center/right total shade order width+ gaps between shades – 3.2mm
	excluding end caps	Fascia width = shade width* – 3mm
		Common fascia width = left/center/right total shade order width+ gaps between shades – 6.2mm
Wood/ Fabric Valance Width	excluding valance returns	Valance width = shade width*
		Common valance width= left/center/right total shade order width+ gaps between shades – 3.2mm

* Shade width = order width – 3.2mm

Disclaimer: Nien Made reserves all rights on updating or modification of any contents within this documentation without prior notification.

Semi-Inside Mount		
Top Treatment		**Finished Width**
Fascia Width	including end caps	Fascia width = shade width*
		Common fascia width = left/center/right total shade order width+ gaps between shades – 3.2mm
	excluding end caps	Fascia width = shade width* –3mm
		Common fascia width = left/center/right total shade order width+ gaps between shades – 6.2mm
Wood/ Fabric Valance Width	including valance returns	Valance inner width = shade width* + 4.8mm x return qty
		Common valance inner width= left/center/right total shade order width+ gaps between shades – 3.2mm + 4.8mm x return qty
		For Fabric Valance: Valance width = Valance inner width +7mm x return qty
		For Wood Modern Valance: Valance width = valance inner width + 11.2mm x return qty

* Shade width = order width – 3.2mm

Outside Mount		
Top Treatment		**Finished Width**
Fascia Width	including end caps	Fascia width = shade width*
		Common fascia width = left/center/right total shade order width+ gaps between shades
	excluding end caps	Fascia width = shade width* – 3mm
		Common fascia width = left/center/right total shade order width+ gaps between shades – 3mm
Wood/ Fabric Valance Width	including valance returns	Valance inner width = shade width* + 4.8mm x return qty
		Common valance inner width= left/center/right total shade order width+ gaps between shades + 4.8mm x return qty
		For Fabric Valance: Valance width = Valance inner width +7mm x return qty
		For Wood Modern Valance: Valance width = valance inner width + 11.2mm x return qty
	excluding valance returns	Valance width = shade width* = order width
		Common valance width= left/center/right total shade order width+ gaps between shades

* Shade width = order width

Note: When requesting custom width valance, please specify based on **inner** width.

When requesting custom width fascia, please specify fascia end cap to end cap width.

The max specified width can be X+305mm (The max width that can be exceed the left / right side is 152.4mm).

Disclaimer: Nien Made reserves all rights on updating or modification of any contents within this documentation without prior notification.

15. Fabric Width Illustrations

Continuous Cord Loop system

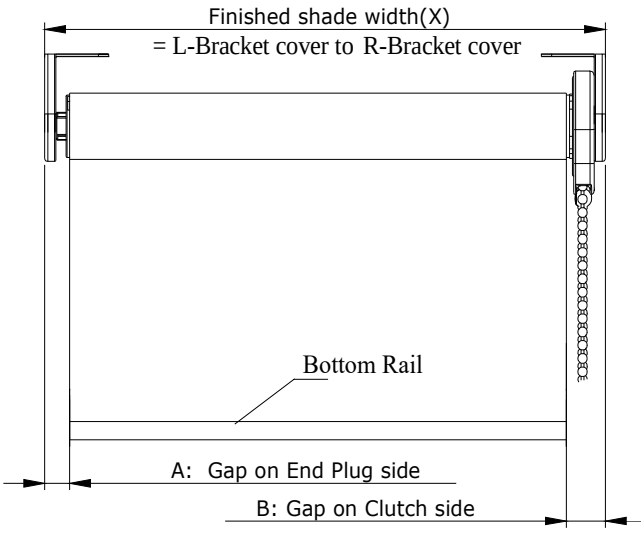

Shade Type	Chain Clutch	Tube diameter	Gap A	Gap B
Continuous Cord Loop without top treatment / with Raceway	29mm	29mm	12.5mm	18mm
	43mm	43mm	12.5mm	18mm
	43mm	52mm	12.5mm	19mm
Continuous Cord Loop with Fascia	29mm	29mm	14mm	19.5mm
	43mm	43mm	14mm	19.5mm
	43mm	52mm	14mm	20.5mm
Continuous Cord Loop with Valance	29mm	29mm	11.5mm	17mm
	43mm	43mm	11.5mm	17mm
	43mm	52mm	11.5mm	18mm

SmartRelease™ system

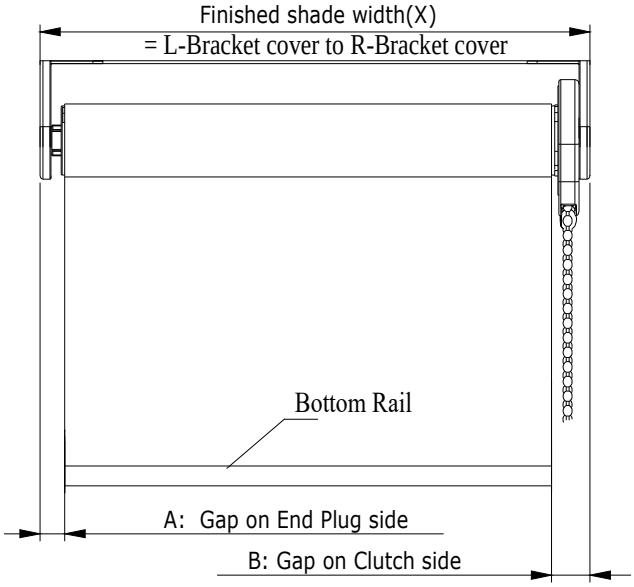

Shade Type	Chain Clutch	Tube Diameter	Gap A	Gap B
SmartRelease™ with Raceway	43mm	43mm	12.5mm	21.5mm
	52mm	52mm	12.5mm	21.5mm
SmartRelease™ with Fascia	43mm	43mm	14mm	23mm
	52mm	52mm	14mm	23mm
SmartRelease™ with Valance	43mm	43mm	11.5mm	20.5mm
	52mm	52mm	11.5mm	20.5mm

PrecisionLift™ Cordless system

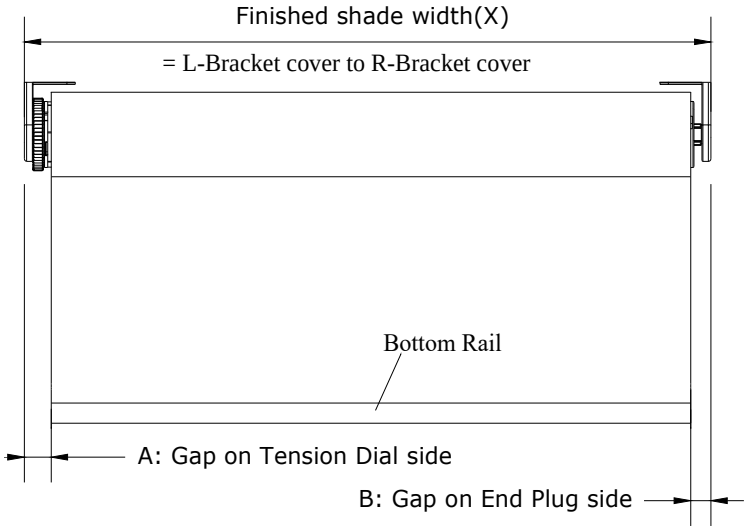

Shade type	Gap A	Gap B
Cordless roller shade without top treatment	12.5mm	12.5mm
Cordless roller shade with Raceway	12.5mm	12.5mm
Cordless roller shade with Fascia	14mm	14mm
Cordless roller shade with Valance	11.5mm	11.5mm

Disclaimer: Nien Made reserves all rights on updating or modification of any contents within this documentation without prior notification.

Motorised

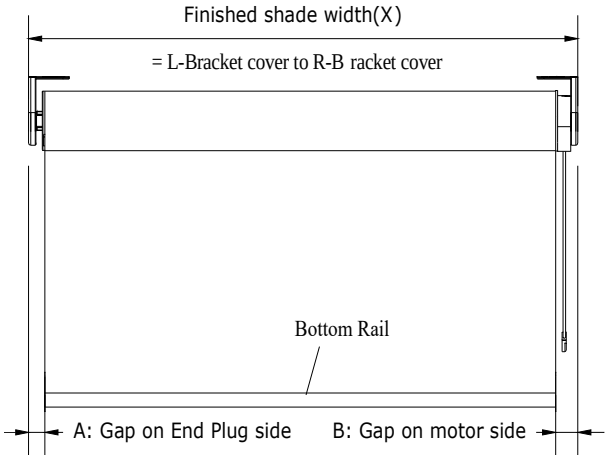

Shade Type	Motor type	Tube diameter	Gap A	Gap B
Motorised roller shade without top treatment	**32A/32B/AM25**	43mm / 52mm	12.5mm	17mm
	32C		12.5mm	18.5mm
Motorised roller shade with Raceway	**32A/32B/AM25**	43mm / 52mm	12.5mm	17mm
	32C		12.5mm	18.5mm
Motorised roller shade with Fascia	**32A/32B/AM25**	43mm / 52mm	14mm	18.5mm
	32C		14mm	20mm
Motorised roller shade with Valance	**32A/32B/AM25**	43mm / 52mm	11.5mm	16mm
	32C		11.5mm	17.5mm

Coupled shade in Continuous Cord Loop

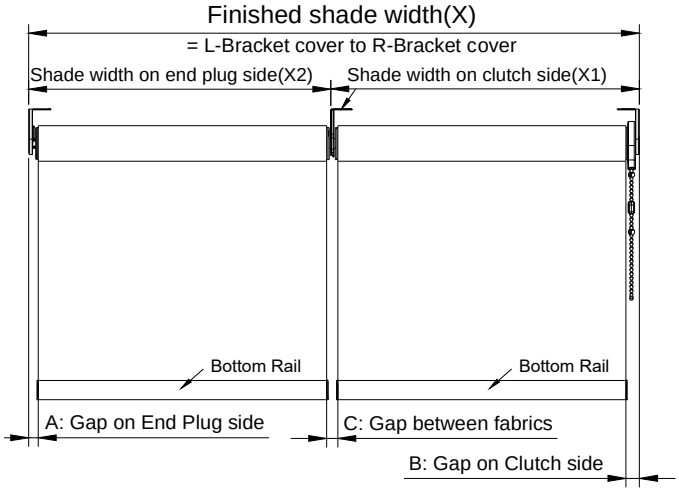

Shade Type	Tube diameter	Gap A	Gap B	Gap C
Continuous Cord Loop without top treatment	43mm	12.5mm	18mm	17mm
	52mm	12.5mm	19mm	17mm
Continuous Cord Loop with Raceway	43mm	12.5mm	18mm	17mm
	52mm	12.5mm	19mm	17mm
Continuous Cord Loop with Fascia	43mm	14mm	19.5mm	17mm
	52mm	14mm	20.5mm	17mm
Continuous Cord Loop with Valance	43mm	11.5mm	17mm	17mm
	52mm	11.5mm	18mm	17mm

Coupled shade in Motorised

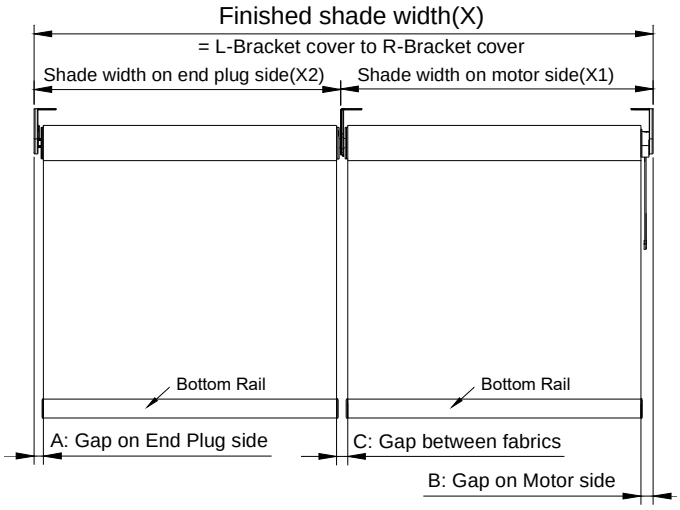

Shade Type	Motor type	Gap A	Gap B	Gap C
Motorised roller shade without top treatment / with raceway	**32A/32B/AM25**	12.5mm	17mm	17mm
	32C	12.5mm	18.5mm	17mm
Motorised roller shade with Fascia	**32A/32B/AM25**	14mm	18.5mm	17mm
	32C	14mm	20mm	17mm
Motorised roller shade with Valance	**32A/32B/AM25**	11.5mm	16mm	17mm
	32C	11.5mm	17.5mm	17mm

Disclaimer: Nien Made reserves all rights on updating or modification of any contents within this documentation without prior notification.

Dual shade in Continuous Cord Loop

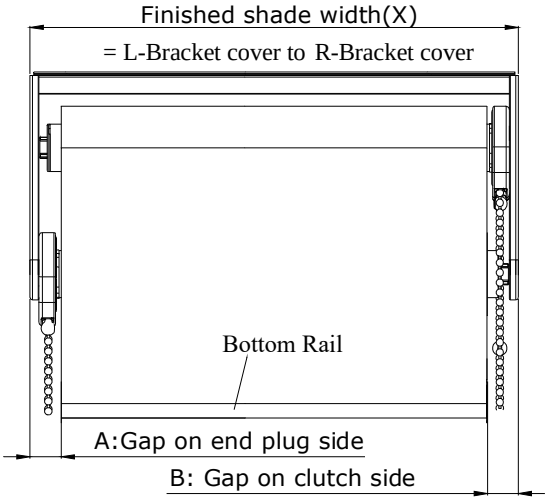

	Chain Clutch	Tube diameter	Gap A	Gap B
without top treatment	29mm	29mm	18mm	18mm
	43mm	43mm	18mm	18mm
with Fabric Valance	29mm	29mm	17mm	17mm
	43mm	43mm	17mm	17mm

Dual shade in SmartRelease™

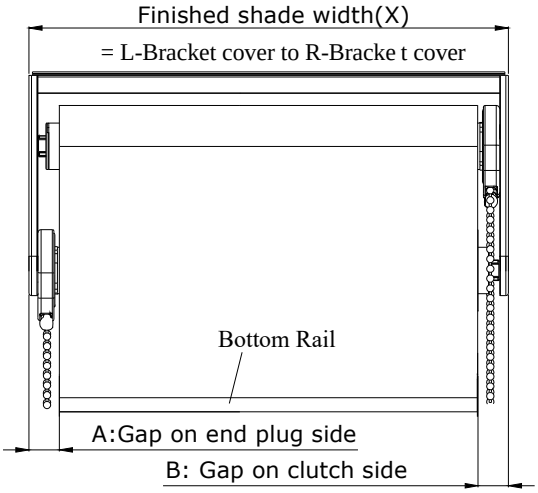

	Chain Clutch	Tube diameter	Gap A	Gap B
without top treatment	43mm	43mm	21.5mm	21.5mm
with Fabric Valance	43mm	43mm	20.5mm	20.5mm

Dual shade in PrecisionLift™ Cordless

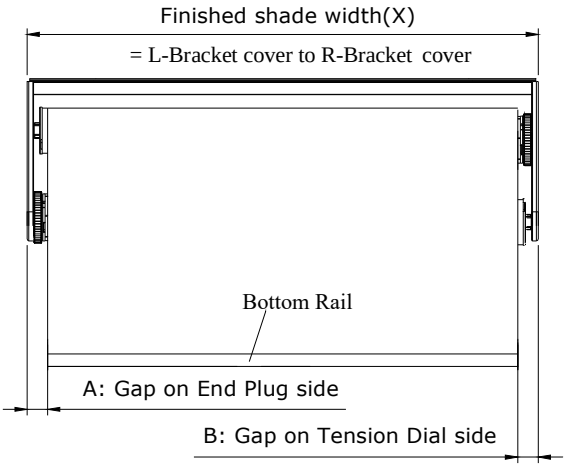

	Gap A	Gap B
without top treatment	12.5mm	12.5mm
with Fabric Valance	11.5mm	11.5mm

Dual shade in Motorised

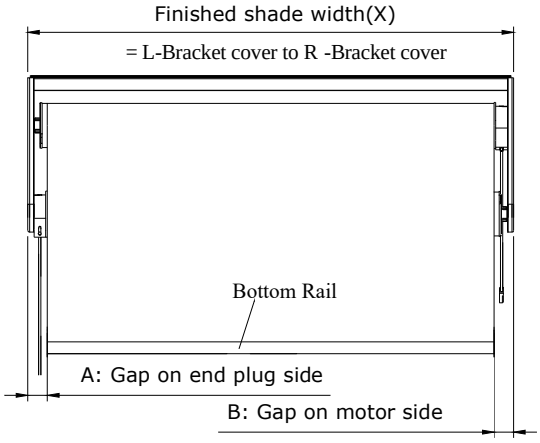

Shade Type	Motor type	Gap (A)	Gap (B)
With raceway	32A/AM25	17mm	17mm
	32C	18.5mm	18.5mm
with Fabric Valance	32A/AM25	16mm	16mm
	32C	17.5mm	17.5mm

Disclaimer: Nien Made reserves all rights on updating or modification of any contents within this documentation without prior notification.

16. Bracket Dimensions

Item	Bracket	Picture	Description
1	Small Shade Bracket	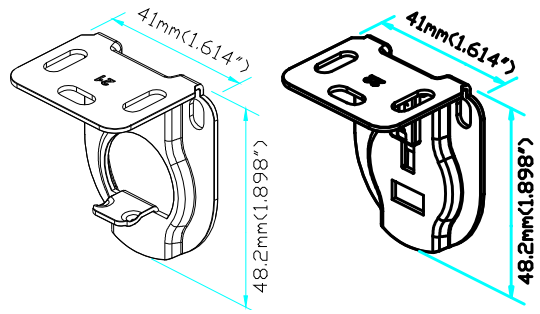 Control side End Plug side	Used for: * 29mm clutch * Motorised
2	Medium Shade Bracket	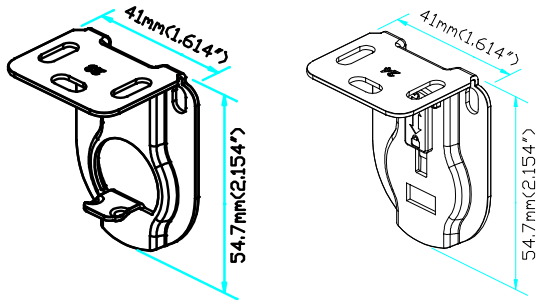 Control side End Plug side	Used for: *29mm clutch * Motorised * Coupled Motorised shade
3	Medium Shade Bracket (with wider lug)	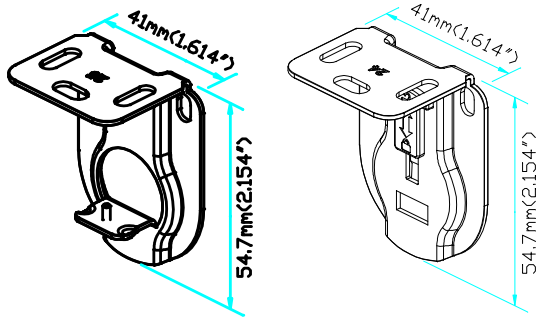 Control side End Plug side	Used for: *43mm clutch * PrecisionLift™ Cordless * SmartRelease™ * Coupled manual roller shade
4	Large Shade Bracket	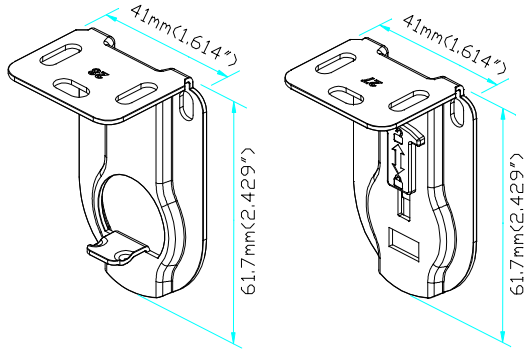 Control side End Plug side	Used for: * Motorised * 29mm clutch * Coupled Motorised shade

Disclaimer: Nien Made reserves all rights on updating or modification of any contents within this documentation without prior notification.

Item	Bracket	Picture	Description
5	Large Shade Bracket (with wider lug)	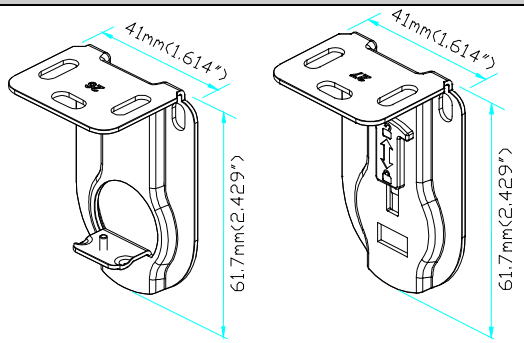 Control side End Plug side	Used for: * 43mm clutch * Coupled manual roller shade * PrecisionLift™ Cordless * SmartRelease™
6	Dual shade bracket	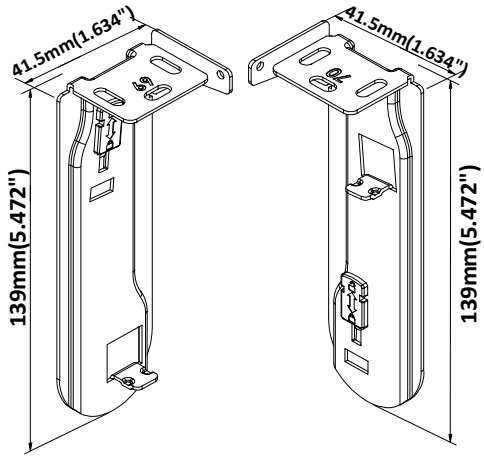 Left side Right side	Used for: * Outside mount with raceway * Dual Motorised roller shade * Dual manual roller shade with 29mm clutch
7	Dual shade bracket (with wider lug)	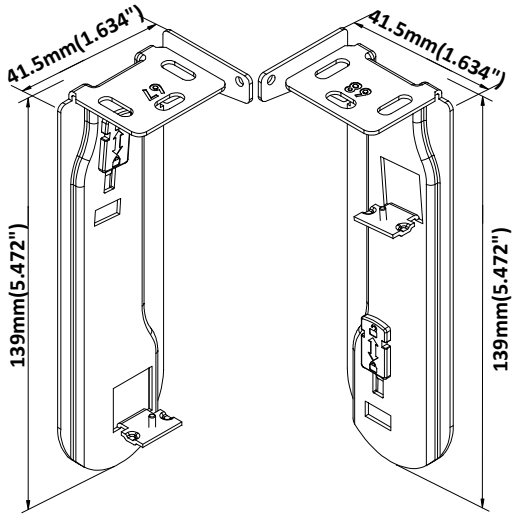 Left side Right side	Used for: * Outside mount with raceway * Dual PrecisionLift™ Cordless * Dual SmartRelease™ * Dual manual roller shade with 43mm clutch

Disclaimer: Nien Made reserves all rights on updating or modification of any contents within this documentation without prior notification.

Item	Bracket	Picture	Description
8	Dual shade bracket	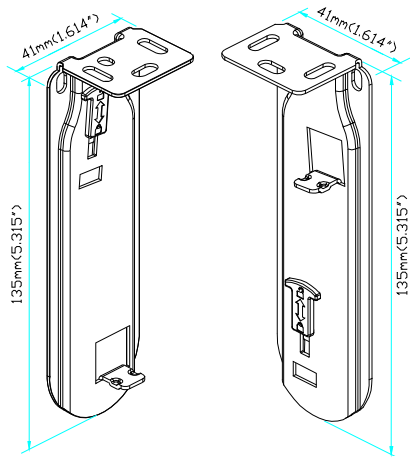 Left side Right side	Used for: * Inside mount with raceway * Dual Motorised roller shade * Dual manual roller shade with 29mm clutch
9	Dual shade bracket (with wider lug)	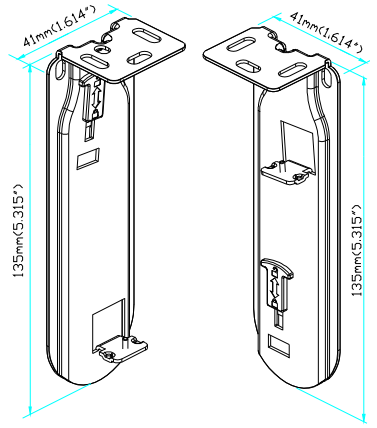 Left side Right side	Used for: * Inside mount with raceway * Dual PrecisionLift™ Cordless * Dual SmartRelease™ * Dual manual roller shade with 43mm clutch
10	OM mounting bracket-3.5	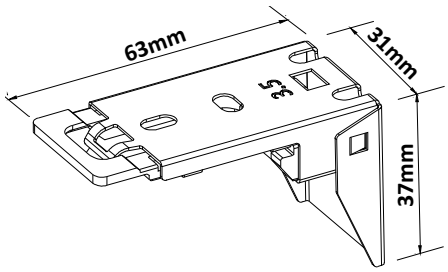	Used for: * Outside mount with raceway
11	OM mounting bracket-4.5	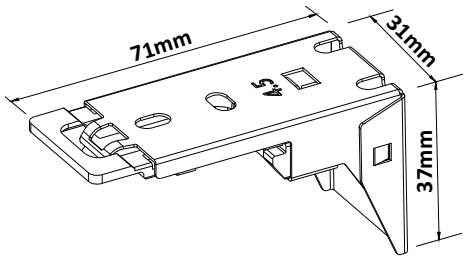	Used for: * Outside mount with raceway

Disclaimer: Nien Made reserves all rights on updating or modification of any contents within this documentation without prior notification.

17. Hardware Information

Different hardware will be provided for different control systems. The qty of some hardware depends on shade width. See below for more information.

Bracket qty for single shades:

Mounting type	Shade width X	#of shade bracket	#of mounting bracket
IM&OM without raceway / IM with raceway	All	2	/
OM with raceway	203mm ≦X≦1016mm	2	2
	1016mm<X≦2032mm	2	3
	X>2032mm	2	4

Note: IM with raceway will be predrilled mounting holes on raceway.

Bracket qty for coupled shades:

Mounting Type	Shade width X	#of shade bracket	#of link bracket
IM&OM without raceway	All	2	1

Note: 1. IM with raceway will be predrilled Mounting holes on raceway.
2. For OM with raceway, the total mounting bracket qty is equal to bracket qty of left shade + right shade.

Bracket qty for dual shades:

Mounting type	Shade width X	#of shade bracket	#of mounting bracket
IM with raceway	All	2	/
OM with raceway	203mm ≦X≦1016mm	2	2
	1016mm<X≦2032mm	2	3
	X>2032mm	2	4

Note: IM with raceway will be predrilled mounting holes on raceway.

Light guard holders qty for top light guard piece (for roller with light guard):

Shade width X	Qty
X≦1016mm	2
1016mm<X≦1727mm	3
1727mm<X≦2438mm	4
X>2438mm	5

Valance Bracket for Square Fascia / Wood Valance:

Valance/Fascia Width X	Qty
X≦1016mm	2
016mm<X≦1727mm	3
1727mm<X≦2438mm	4
2438mm<X	5

Note: For common valance/fascia or valance/fascia in custom width, the qty of valance bracket = (Outer width of each piece -305mm)/711+1

Disclaimer: Nien Made reserves all rights on updating or modification of any contents within this documentation without prior notification.

Valance Bracket for Curved Fascia / Fabric Valance:

Shade Width X	Qty
X≦838mm	2
838mm<X≦1372mm	3
1372mm<X≦1905mm	4
1905mm <X≦2438mm	5
2438mm <X≦2972mm	6
X>2972mm	7

Note: For common valance/fascia or valance/fascia in custom width, the qty of valance bracket= (Outer width of each piece -305mm)/533+1

18. Soluna™ Roller Shades Fabric Expectations

Roller shades have been a go-to window treatment solution for decades. Advancements in fabrics, operating systems and options have taken roller shades to the next level.

Their sleek, modern appearances have made them the current top selling window treatment.

Our Soluna™ Roller Shades have introduced several award-winning features designed to enhance your roller shade experience:

- Smooth operating, trouble-free PrecisionLift™ cordless system
- Light blocking Light Guard system
- Environmentally friendly 100% polyester solar screens

There are certain inherent characteristics of Soluna™ Roller Shades that can be found in any roller shade in the market. Since we always strive to provide the highest quality window treatment solutions, we are communicating these industry-wide operating and fabric characteristics.

Disclaimer: Nien Made reserves all rights on updating or modification of any contents within this documentation without prior notification.

SIDE LIGHT GAPS

All roller shades have side light gaps because the shade fabric is not as wide as the tube it rolls up onto to accommodate the mounting brackets. If total privacy or room darkness is desired, these gaps have to be considered. Our Light Guard system hides these gaps to decrease penetrating light. For the ultimate room-darkening solution, choose our LightGuard 360™ system with integrated side, top and bottom channels.

TELESCOPING OR TRACKING

- Occurs when the fabric does not roll up straight onto the roller tube.
- May cause fabric fraying as a result of continual contact with the clutch.
- Often caused because the shade is not level.
- Can usually be corrected by re-leveling the shade.

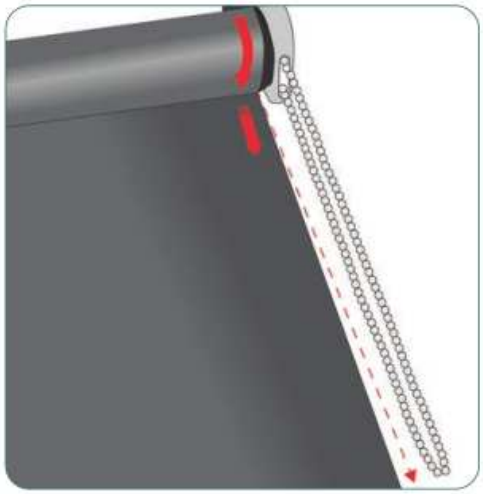

Disclaimer: Nien Made reserves all rights on updating or modification of any contents within this documentation without prior notification.

FABRIC FRAYING

- Often a natural occurrence associated with certain fabrics.
- May be caused by continual contact with the operating clutch (see telescoping above).
- Can normally be trimmed with scissors.

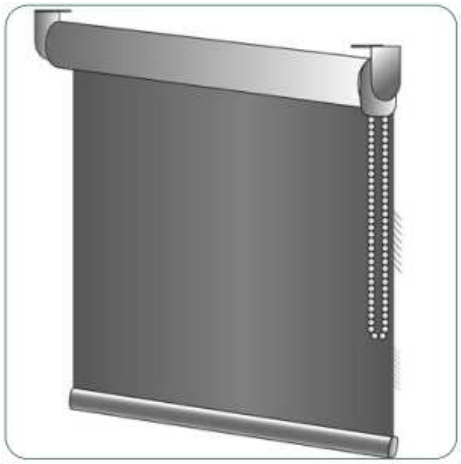

CURLING OR CUPPING

- Fabric edges occasionally may curl. This occurs due to the weight of the fabric and should be considered a normal characteristic.
- Fabric panel will often appear taut at the top, near the tube and at the bottom, towards the bottom rail.
- Curling is more noticeable in the middle of the shade.
- May be avoided by splitting the shade into two separate shades.

DEFLECTION

- Shows up as V pattern in the middle of the shade fabric.
- Occurs when the shade is in a raised position for a long period of time.
- For wider shades with heavier fabrics, the metal tube may sag over time. As a result, deflection may be more pronounced.

Disclaimer: Nien Made reserves all rights on updating or modification of any contents within this documentation without prior notification.

FABRIC RIPPLING OR WAVING

- Vertical or diagonal ripples in the fabric.
- May be a result of minor imperfections of fabric weaving or that the shade is not rolled properly.
- May be avoided by splitting the shade into two separate shades.

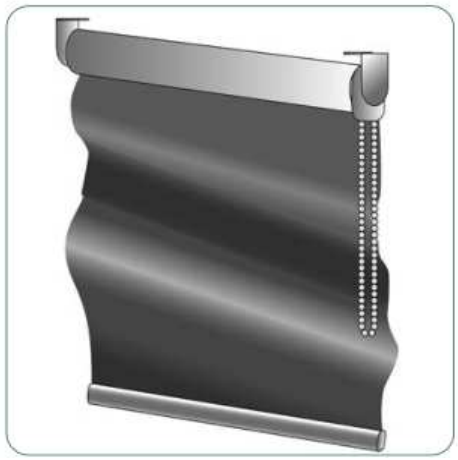

FABRIC TWISTING

- Fabric may twist vertically when the shade is long and narrow.
- This is considered normal and is not a manufacturing defect.

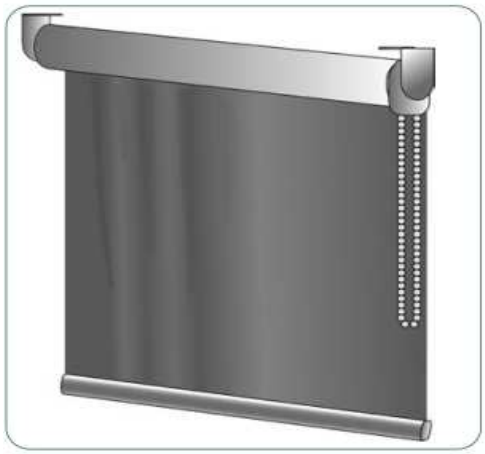

19. Soluna™ Roller Shades Product Care instructions

Soluna™ Roller shades are designed for sustainability. Occasional dusting is still recommended as it will help maintain the beauty of your shade. Here are the proper methods for cleaning Roller Shades. Be careful not to bend the fabric while cleaning.

Dusting:

- Use a duster to remove any light dust.
- Use a vacuum with a soft brush attachment or a handheld vacuum to remove dust and debris.

Spot cleaning:

- Roller Fabrics cannot be dampened or spot cleaned. Water will damage the fabric.
- Solar Screens can be spot cleaned with a damp cloth. If necessary, a mild detergent can be used and must be rinsed out thoroughly. Always allow the shade to dry completely in a lowered position before operating.

Disclaimer: Nien Made reserves all rights on updating or modification of any contents within this documentation without prior notification.